Gâches électriques

Apriporta elettrici

Elektro-Türöffner

Electric strikes

Cerraderos eléctricos

We unlock doors. The safe way.

Exploring new channels, utilising modern techniques and reliably implementing innovative new concepts. Since its foundation back in 1936, the company, effeff, from Albstadt has developed on the basis of this consistent strategy to become market leader in the field of door control systems. After the start of strike production in 1947, a comprehensive product range was generated one step at a time which today encompasses system solutions for all types of doors engineered down to the last detail. An extremely important step was undertaken on February 1, 2000: Since this key date, effeff has been a member of the Stockholm based ASSA ABLOY Group. This has meant that effeff customers profit from the comprehensive expertise of the world's biggest name in this sector, which supplies every conceivable type of product designed to enhance convenience and security around the entire globe. A world-wide sales network spanning more than 60 countries and a workforce which has now grown to 410 underline the enormous competence effeff offers its customers. The company based in the Swabian region of southern Germany attaches particular importance to customer proximity and service.

effeff: Safety. Security. Protection.

Top quality. Proven the world over.

The security and convenience effeff offers its customers is founded on a long and proven tradition. This applies just as much to the conventional principle of the door strike as to the automatically controlled door locking and access system. Strikes from effeff, which are only part of a wide-ranging product spectrum, are suitable for widely differing types of door, lock and frame in conjunction with a variety of striking plates. This makes effeff strikes the ideal solution for almost any mounting situation. Furthermore to develop our high standard of quality, effeff was the first company working in this field to gain DIN EN ISO 9001 certification. Our products are in compliance with wide-ranging application requirements in the private, commercial and public sector. This is a guideline which stands up around the entire globe; meaning that effeff conforms not only to national but also international regulations and stipulations. Alongside its standard electric strike range, effeff has earned an outstanding reputation in the field of high-security strikes, access control systems and escape route systems: effeff is Germany's leading manufacturer of door release and locking systems. We are respected as a specialist in engineering technically complex solutions such as systems for security vans, banks or complex interlock control systems. No-compromise security is what effeff stands for: yesterday, today and tomorrow.

OUR COMMITMENT

A richly varied range of products coupled with comprehensive service. These are what effeff has traditionally based its reputation upon. In this catalogue, we stand up to our name, offering maximum flexibility in the service of our customers the world over.

CONTENTS

"Modern technology from effeff" 2

Contents 4

"How to order your effeff strike" 5

Strikes according to applications **8**

Strikes for metal doors 10

Strikes for wooden doors 18

Strikes for plastic and aluminium profiles 28

Strikes for special doors 32

Strike model series **34**

Standard strikes 36

Water-resistant strikes 56

Strikes for fire doors and barriers 70

Strikes for glass doors 86

Strikes for dead bolt locks 94

Strikes for sliding doors 100

Strikes for swing doors 104

Strikes for pneumatic applications 106

Strikes for special applications 108

Striking plates **120**

Angled striking plates 126

Flat striking plates 148

Striking plates for fire doors 212

Surface-mount housings 224

Mounting plates 227

Dummy components and surface-mounted attachments
for standard strikes with adjustable keep (Fafix) 228

Abbreviations and definition of terms from A - Z 232

Technical explanations 233

effeff for professionals: Models by number 238

Fax order form 242

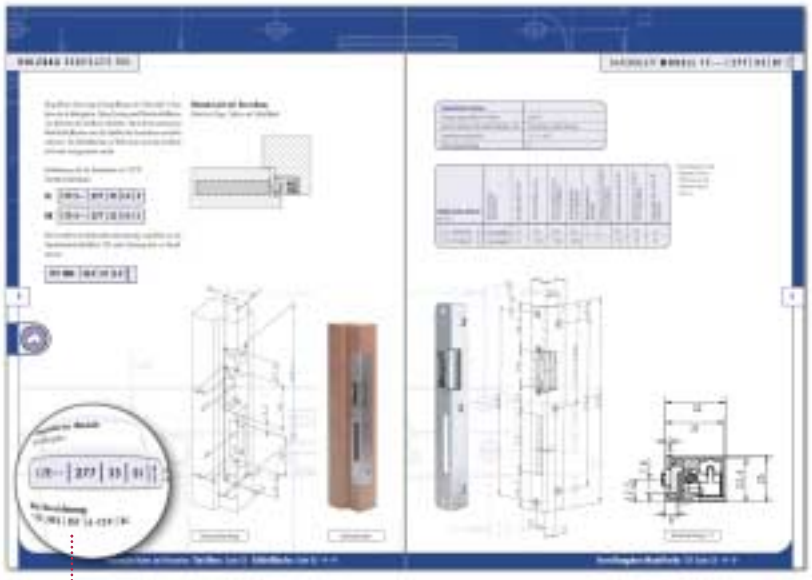

How to find the strike you need ➔ look at page 8

Each of our preferred models is reliably identified by its order data. This is located on the relevant pages. For comparison, we have also listed the old designation. Simply enter the data relating to the product you require into the order form attached to this catalogue.

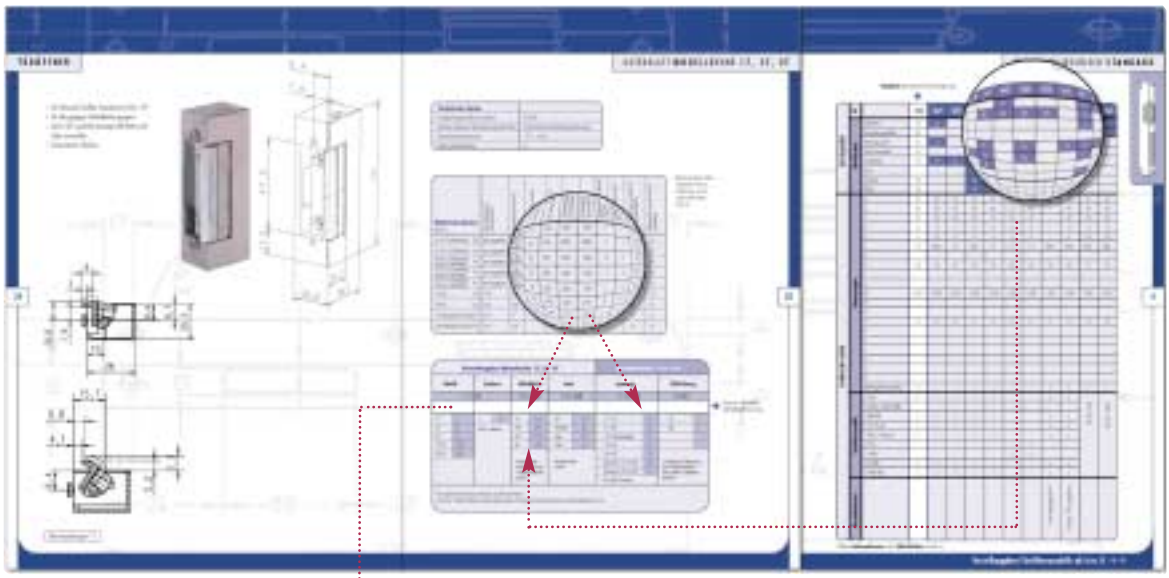

How to find the new order number ➔ look at page 35

The strike and striking plate you wish to order are precisely defined by a 15-digit order number. Using this precise definition, we can process your order and ensure you receive a fast and efficient service.

How to find the strike you need:

Go through the individual headings in sequence, decide in favour of one of the characteristics listed below each of the headings and enter the adjacent order number from the blue column into the order line or directly into the order form. The order number, totalling 15 digits in all, will provide a precise definition of your specific requirement from our wide variety of products and the different available variants.

1. Order number to describe an effeff model according to the new ordering system:

Digits 1 - 7		Digits 8 - 10	Digits 11 + 12	Digits 13 + 14	Digit 15
17	**E ----**	**021**	**35**	**D1**	**1**

Digits 1 - 7: Unassigned digits are replaced with "-"

Model designation

17E---- | 021 | 35 | D1 | 1

The EDP number - the most reliable way to order the right strike:

- Using the order number eliminates any possibility of confusion.
- The model is unequivocally identified on the rating plate of the strike with the order number.
- The striking plate shape and colour are precisely defined.
- In-stock articles bear the same designation in your inventory and in ours.

2. How you used to find your door release using the old order system:

(Simply by way of comparison - we recommend no longer using this system.)

When working generally with strike products, abbreviations are still used to describe standard strikes. Our form sheets permit both these possibilities to be used. Example for the use of abbreviations to describe the same model:

17	**E**	**HZ**	**EST**	**6-12 V**	**UNI**

Model designation::

17E | HZ | EST | 6-12 V | UNI

However, this abbreviated designation does not unequivocally define the article. In case of unclear or incomplete information, we will always deliver the relevant standard model in accordance with the old order procedure. In order to guarantee an absolutely reliable definition, we therefore recommend always using the 15-digit order number.

Order data, model series 17, 27, 37								Order number = blue area			
Model		Design		Striking plate		Colour		Voltage		DIN orientation	
Digits 1 - 7				Digits 8 - 10		Digits 11 + 12		Digits 13 + 14		Digit 15	
17	17	E	E	HZ	021	EST	35	6 - 12 V	D1	UNI	1
27	27	FAFIX = standard		IW	324	galvanized	40	8 - 16 V	R1	DL	4
37	37			IW	277	grey	02	12 V Intercom	E5	DR	5
1705	1705			Possible combinations are indicated in the striking plate tables		gold	01	12 V 100% duty cycle	E4	For indication of the DIN orientation, please note the striking plate table and the selected striking plate.	
3705	3705					For possible colours, see the striking plate tables and page 236		24 V 100% duty cycle	F4		
								Fail unlocked 12 V (37)	E9		
								Fail unlocked 24 V (37)	F9		
								R1 replaces E5			

For possible combinations, please see the price list.
The first 7 digits can vary for special models. Please enquire with us regarding the designation for special models.

Company ..... Sector ..... e-mail .....

Contact ..... Tel. ..... Fax .....

Street/PO box ..... Customer no. .....

Postal code /city ..... Order date .....

Order number					Qty.
17E----	277	35	D1	4	10
17-----	338	35	E4	1	2
1705RR-	338	35	E4	1	1
131FF--	028	35	E3	4	5
142FF--	021	02	D1	4	2
1705---	---	--	E4	1	10
-------	021	35	--	1	10

Further orders	Qty.
1410---------00	30
14.100001103-40	50
SET-LA-M4----00	100

An ASSA ABLOY Group company

Complete and send off

We have enclosed ready-prepared order forms for your convenience according to the above sample in this brochure. Please enter the order number of the required product and fax the form sheet to your effeff-partner.

Metal doors

from page 10

Wooden doors

from page 18

A firm connection

Steel frames are used for new buildings and renovation projects. Here, effeff offers special solutions also for retrofit mounting. Choose from a wide-ranging selection of flat striking plates, also with keep guide or adjustable variants. The striking plates are available with a variety of different surfaces such as stainless steel, galvanized or powder-coated, in silver, gold, black and white. Fixing lugs are available for simple, convenient mounting.

Welcome home

As a rule, the front doors of private houses and apartments as well as internal room doors are generally made of wood, and these are fitted by effeff with special strikes. The wide variety of angled striking plates and different geometries available mean that you will always find just the right model for your doors. Excess length, solid striking plates also comply with stringent demands in terms of security and also stability. Along with the standard stainless steel surfaces, other high-grade finishes are also available, such as polished brass, for example.

Plastic and aluminium

from page 28

A perfect system

The wide variety of plastic and aluminium profiles and the different geometries involved call for a perfectly coordinated system of locks and strikes in every case. Depending on the geometry, flat striking plates or U-shaped striking plates can be used. Reputable profile manufacturers offer their customers an extremely wide range of special striking plates which are equipped by effeff with the special strikes.

Special designs

from page 32

Security in the right solution

There are quite specific demands made on every door - and so on every door strike: Special solutions to address precise requirements represent something of challenge - one that is lived up to by effeff through meticulous attention to detail in line with your personal expectations. Our broad-based range of special designs is certain to contain the right solution for your own very individual door.

You will find strikes for:

1 Water resistant models (from p. 56)
2 Fire doors and barriers (from p. 68)
3 Glass doors (from p. 86)
4 Dead bolt locks (from p. 94)
5 Sliding doors (from p. 100)
6 Swing doors (from p. 104)
7 Pneumatic applications (from p. 106)
8 High-security strikes (p. 68, 108)
9 Supplementary locks (from p. 112)
10 Panic locks with actuating bars (from p. 118)

Modern security - naturally from effeff.

In new buildings or renovation projects, steel frames are frequently used. You will always be on the safe side with effeff: We offer special solutions based on the very latest developments, both for series production and retrofitting. effeff offers you the opportunity to select from a rich and varied selection of flat striking plates, also with keep guide or adjustable variants. Furthermore, if you have special surface finish requirements, effeff has a wide range of different finishes ready for you to choose from, for example stainless steel, galvanized, powder coated in silver, gold, black, white etc. And to simplify the job of mounting, effeff striking plates come complete with mounting plates.

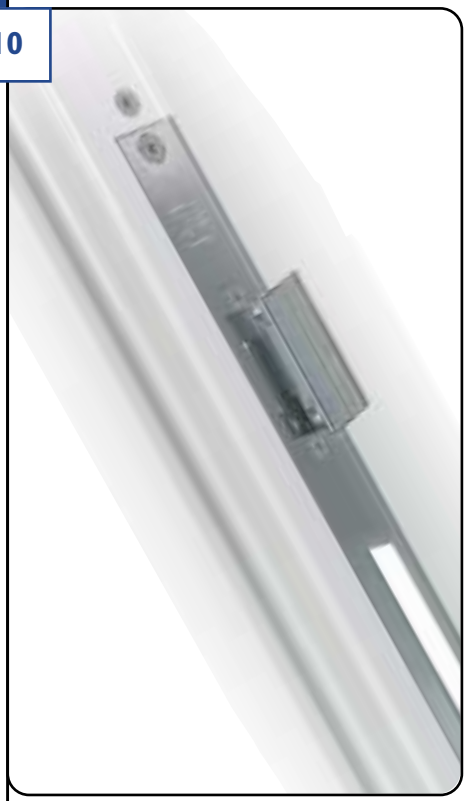

INTELLIGENT SECURITY. PERFECTION IS OUR FORTE.

Different doors featuring a widely varied range of door release systems call for maximum flexibility in the service of our customers. This challenge is one effeff has traditionally been proud to meet in the execution of every single order: Our wide selection will safely provide you with just the model you need to meet those specific demands.

effeff offers a complete range of door control systems for doors made of all kinds of materials. Decided in favour of a metal door? These are particularly popular in new buildings and renovation projects. We can offer you special solutions for mounting your strike, both in series production and for retrofit mounting. A large selection of flat striking plates, also with keep guide, or adjustable variants are also available. The striking plates are supplied in every conceivable surface finish, and mounting plates permit simple mounting.

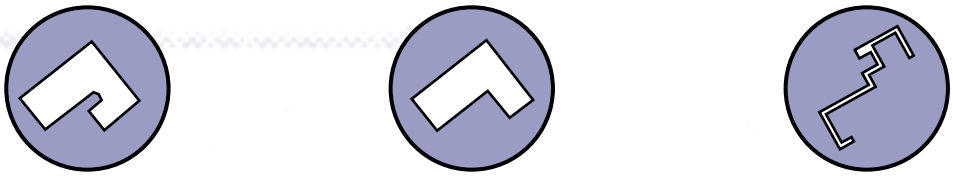

Rebated doors, flush striking plate

With rebated doors, the recommended striking plate types are mounted flush with the surround side into the metal frame. Strikes with FaFix (FF) have proven particularly successful for this application (from page 12).

Flush fitting door, flush striking plate

In flush fitting doors, the normally central position of the lock in the door leaf means that the engaging edge of the latch bolt is offset towards centre frame.
The keep guide bridges the distance between the door stop and the engaging edge, creating a visually closed design (from page 14).

Retrofit striking plate, screw-mounted

When retrofitting strikes in steel frames, the striking plate is most successfully screwed on, paying attention to ensure that a distance of at least 4 mm is available between the door leaf and the frame (from page 16).

effeff offers complete door control systems for the three main design types.

INDIVIDUAL MODEL? LEAVE IT TO US!

Alongside the most popularly used models, effeff also holds a wide stock of other door control variants: Individual solutions for every door. Simply ask us - we will be pleased to help you.

When working with rebated doors, the engaging edge of the lock keep is positioned 3 - 4 mm behind the stopping edge. The recommended flat striking plates are mounted flush with the surround side into the metal frame. For simple fixture when working with material thicknesses between 2 and 4 mm, the illustrated mounting plates should be used. Agreement between the design of the door leaf and the lock position is achieved by means of a sectional drawing. effeff advises using strikes with FaFix (FF) in order to compensate for varying lock positions and differences in the types of door seal used. FaFix is standard in the model series 17.

Model number for combination with 12 V DC access control systems:

1705RR- | 338 | 35 | E4 | I

Mounting example with sketch

Section showing frame, lock and striking plate

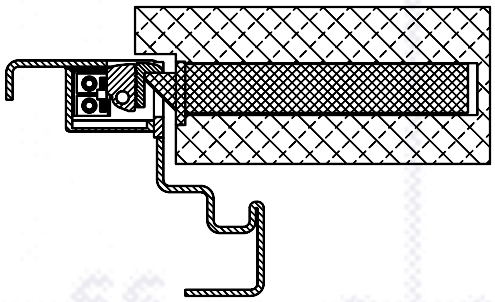

Illustrated model:

EDP order data:

17E---- | 338 | 35 | DI | I

+

SET-LA-M5----00

Former designation:

17E | HZ | Eckla | EST | 6-12 V | UNI

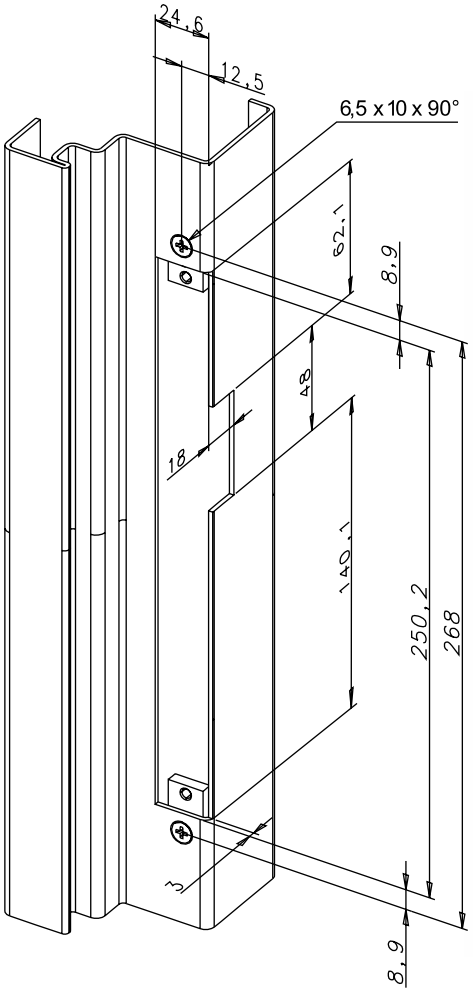

Preparation for mounting

Mounting situation

Specifications and variants: **Strikes:** Page 45 · **Striking plates:** Page 155 ➔➔

Specifications	
Break-in resistance	3500 N
Material housing/keep/surface-m. attachment	Die-cast zinc/die-cast zinc/brass
Operating temperature range	-15 °C to + 40 °C
Mounting independent of position	Yes

Electrical data At 20 °C		Operating voltage Tolerance range	Rated resistance in Ohm	AC current consumption in mA	DC current consumption in mA (50% Residual ripple)	DC current consumption in mA (stabilized)	Operating noise during AC operation*	Operating noise during DC operation* (50% Residual ripple)	Keep pre-load max. in N with AC	Keep pre-load max. in N with DC (50% Residual ripple)	Keep pre-load max. in N with DC (stabilized)
6-12 V (6-V operation)	DI	as specified	9,1	550	630	660	5	1	80	80	10
6-12 V (12-V operation)	DI	as specified	9,1	1100	1200	1300	5	1	150	90	50

*For operating noise, see diagram page 235. Explanation of technical data page 234.

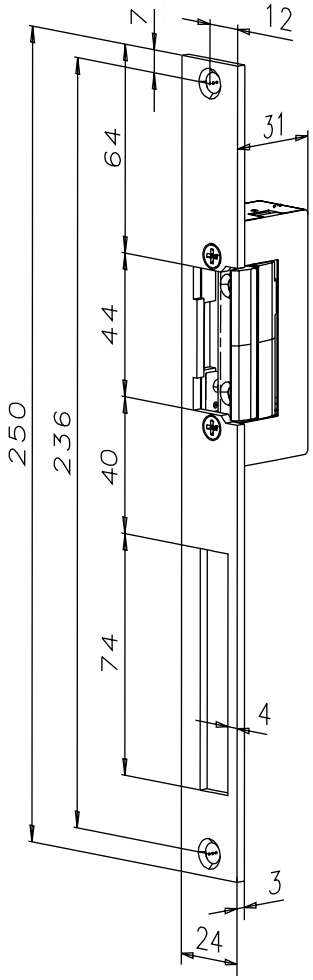

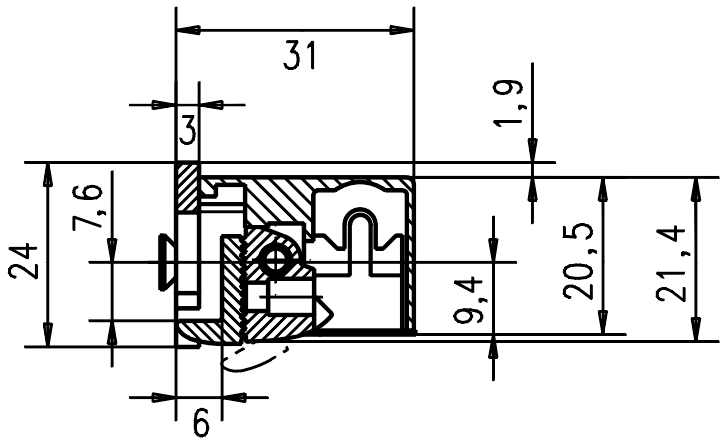

Sectional drawing 1:1

In the case of flush fitting doors, the normally central position of the lock in the door leaf means that the engaging edge of the keep is offset towards centre frame. In order to obtain an optically closed design, a **distance of 14 mm** between the door stop and the engaging edge is bridged by the keep guide. The latch bolt must be positioned at the engaging edge of the keep.
As the keep is adjusted already in the factory relative to the keep guide, effeff always supplies this combination ready assembled. For smooth, easy running interaction between the latch bolt and the keep guide, it is advisable to round off and grease the tip of the latch bolt.
If you order the handy mounting plates, effeff will naturally also include the matching stainless steel screws in the package.

Model number for combination with 12 V DC access control systems:

1405RR- | 033 | 35 | E3 | 4/5

Mounting example

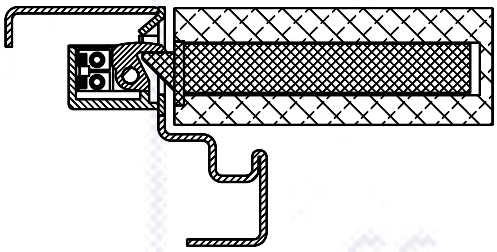

Illustrated model:
EDP order data:

14E---- | 033 | 35 | D1 | 4/5

+

SET-LA-M4----00

Former designation:
14E | HZF | Eckla | EST | 6-12 V | DL

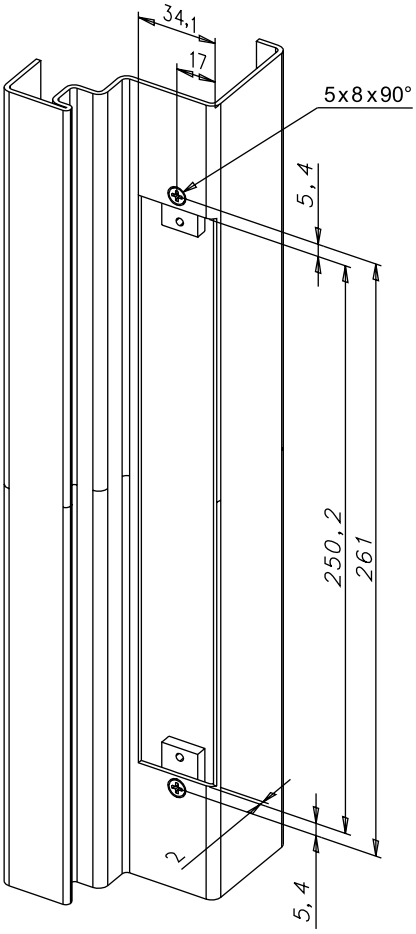

Preparation for mounting

Mounting situation

Specifications and variants: **Strikes:** Page 37 · **Striking plates:** Page 195 ➔➔

Specifications	
Break-in resistance	6500 N
Material housing/keep standard	Die-cast zinc/steel
Operating temperature range	-15 °C to + 40 °C
Mounting independent of position	Yes

Electrical data At 20 °C		Operating voltage Tolerance range	Rated resistance in Ohm	AC current consumption in mA	DC current consumption in mA (50% Residual ripple)	DC current consumption in mA (stabilized)	Operating noise during AC operation*	Operating noise during DC operation* (50% Residual ripple)	Keep pre-load max. in N with AC	Keep pre-load max. in N with DC (50% Residual ripple)	Keep pre-load max. in N with DC (stabilized)
6-12 V (6-V operation)	DI	as specified	7,7	550	740	780	4	1	160	40	10
6-12 V (12-V operation)	DI	as specified	7,7	1100	1480	1560	4	1	160	100	60

*For operating noise, see diagram page 235. Explanation of technical data page 234.

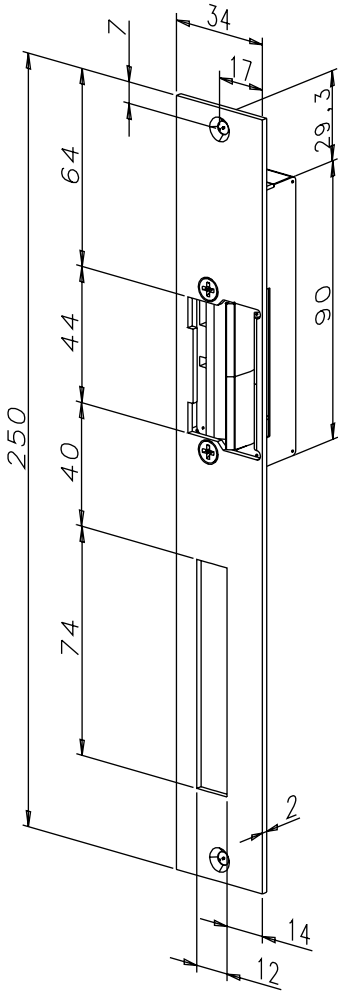

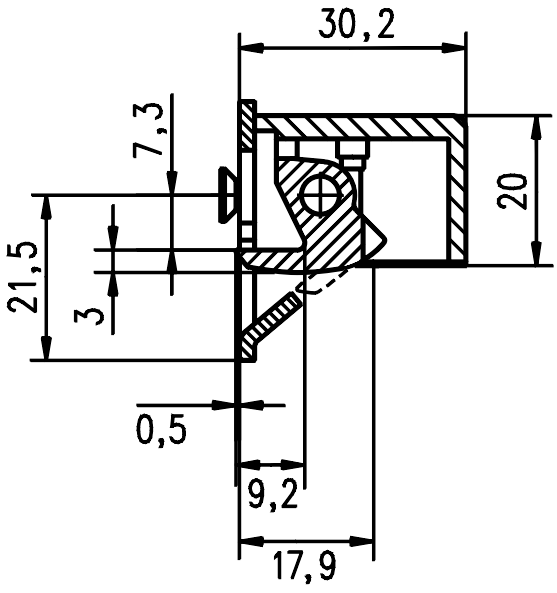

Sectional drawing 1:1

Order data model series 14: Page 37 ➔➔

When strikes have to be retrofitted into steel frames, the striking plates should be screwed on. An important condition here is a distance (rebate clearance) of at least 4 mm between the door leaf and the frame. The edges of the subsequently generated opening are covered by the striking plate.

Model number for combination with 12 V DC access control systems:

1705RR- | 021 | 35 | E4 | 1

Mounting example

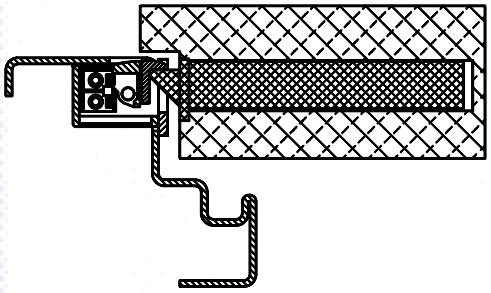

Illustrated model:
EDP order data:

17E---- | 021 | 35 | D1 | 1

Former designation:
17E | HZ | EST | 6-12 V | UNI

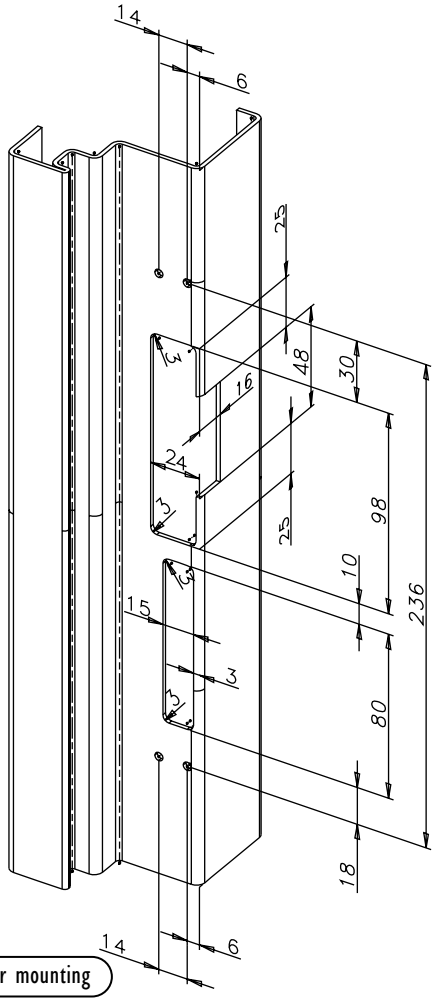

Preparation for mounting

Mounting situation

Specifications and variants: **Strikes:** Page 45 · **Striking plates:** Page 151 ➔➔

Specifications	
Break-in resistance	3500 N
Material housing/keep/surface-m. attachment	Die-cast zinc/die-cast zinc/brass
Operating temperature range	-15 °C to +40 °C
Mounting independent of position	Yes

Electrical data At 20 °C		Operating voltage Tolerance range	Rated resistance in Ohm	AC current consumption in mA	DC current consumption in mA (50% Residual ripple)	DC current consumption in mA (stabilized)	Operating noise during AC operation*	Operating noise during DC operation* (50% Residual ripple)	Keep pre-load max. in N with AC	Keep pre-load max. in N with DC (50% Residual ripple)	Keep pre-load max. in N with DC (stabilized)
6-12 V (6-V operation)	DI	as specified	9,1	550	630	660	5	I	80	80	10
6-12 V (12-V operation)	DI	as specified	9,1	1100	1200	1300	5	I	150	90	50

*For operating noise, see diagram page 235. Explanation of technical data page 234.

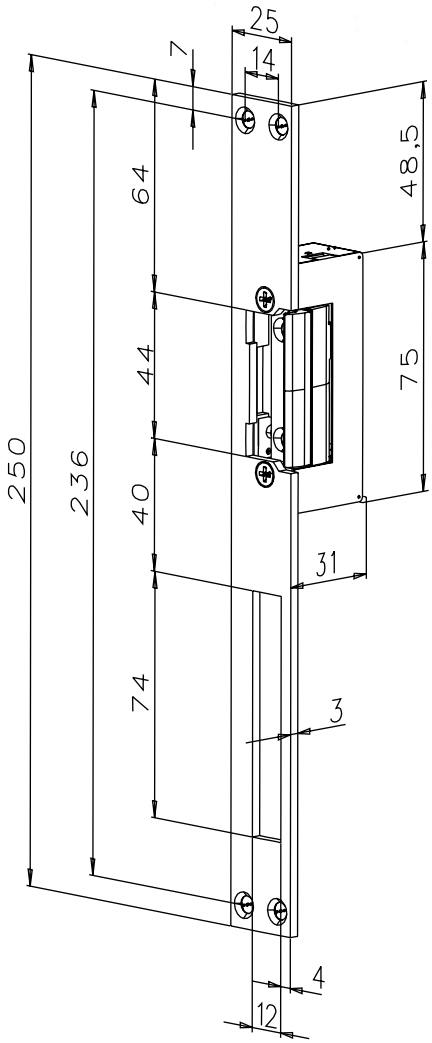

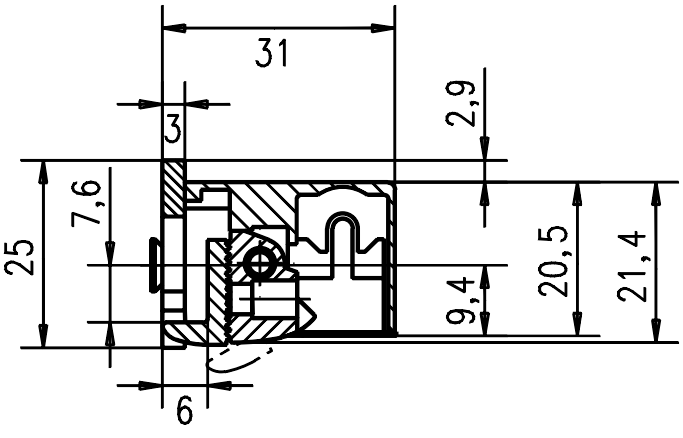

Sectional drawing 1:1

Individual solutions from effeff.

Strikes are used in a number of different applications in wooden doors. Alongside front doors in private houses and apartments, they can also be used in inner doors which have a suitable wooden frame. Our large selection of effeff angled striking plates in every conceivable geometry permits a custom-tailored solution to be found in line with your needs. And if you are looking for that little bit extra in terms of security and stability, our comprehensive selection of excess length and solid striking plates is designed to comply with more stringent standards from every point of view. Added to this wide scope for choice is the almost legendary effeff variety when it comes to different surface finishes. Here, effeff has what it takes to offer a convincing answer to the most exclusive design concepts with a range of high-grade finishes such as "polished brass" or "stainless steel".

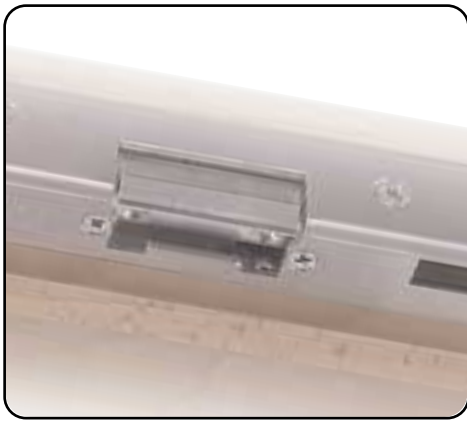

RELIABLE AND DURABLE. NO MATTER WHAT THE OCCASION

Stringent demands are made on modern door control systems. Which is why effeff offers the ideal solution address every different situation. Discover our army of "little helpers" - reliable, robust, secure.

effeff offers a complete range of door control systems for doors made of all kinds of materials. Decided in favour of a wooden door? In everyday practical terms, the different door control systems here are broken down into four types:

Rebated doors

With a rebate depth of 35 mm, we recommend using striking plates with keep guide. These offer the outstanding benefit that there is no need to cover the striker housing on the facing side (from page 20).

Flush fitting doors with deep rebate

From a rebate depth of 35 mm, effeff recommends using striking plates with keep guide and flange. With extremely stable door designs, the position of the keep is offset by more than 13 mm relative to the stop edge. This distance is bridged by the flange at the striking plate (from page 22).

Secondary rebate

The special solution for wooden profiles with secondary rebate; strike in the narrow angled striking plate. To fit secondary rebate 18 x 8 mm (from page 24).

Bevel

The ideal component for bevelled internal door locks and bevelled front door locks (from page 26).

effeff offers complete door control systems for the four main design types.

INDIVIDUAL MODEL? LEAVE IT TO US!

Alongside the most popularly used models, effeff also holds a wide stock of other door control variants: Individual solutions for every door. Simply ask us - we will be pleased to help you.

In rebated doors, the engaging edge of the latch bolt lies 3-4 mm behind the stop edge. As a result, angled striking plates are required to cover the strike. Due to the use of angled striking plates, the stability of the design is considerably enhanced. When using striking plates with radius, there is no longer any need for subsequent mortising after countersinking. 3 mm material thickness and 5 fixing holes guarantee absolute stability.

Model number for combination with 12 V DC access control systems:

1705--- | 277 | 35 | E4 | 4/5

If a monitoring contact is additionally required, we recommend using the (2 mm thick) standard angled striking plate 324 (see drawing on page 123).
Order number:

1705RR- | 324 | 35 | E4 | 4/5

Illustrated model:
EDP order data:

17E---- | 277 | 35 | D1 | 4/5

Former designation:
17E | iW3 | EST | 6-12 V | DL

Mounting example with sketch

Section showing frame, lock and striking plate

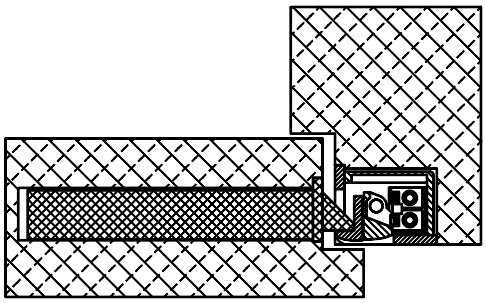

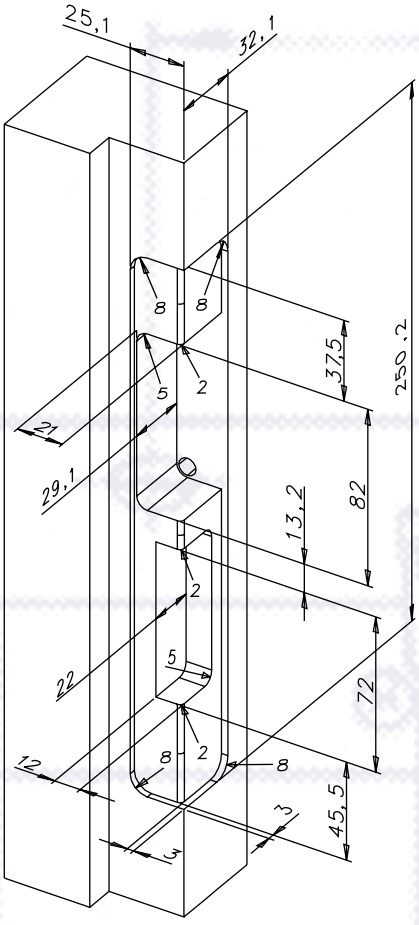

Preparation for mounting

Mounting situation

Specifications and variants: **Strikes:** Page 45 · **Striking plates:** Page 123, 127 ➔➔

Specifications	
Break-in resistance Standard	3500 N
Material housing/keep/surface-m. attachment Fafix	Die-cast zinc/die-cast zinc/brass
Operating temperature range	-15 °C to +40 °C
Mounting independent of position	Yes

Electrical data At 20 °C		Operating voltage Tolerance range	Rated resistance in Ohm	AC current consumption in mA	DC current consumption in mA (50% Residual ripple)	DC current consumption in mA (stabilized)	Operating noise during AC operation*	Operating noise during DC operation* (50% Residual ripple)	Keep pre-load max. in N with AC	Keep pre-load max. in N with DC (50% Residual ripple)	Keep pre-load max. in N with DC (stabilized)
6-12 V (6-V operation)	DI	as specified	9,1	550	630	660	5	1	80	80	10
6-12 V (12-V operation)	DI	as specified	9,1	1100	1200	1300	5	1	150	90	50

*For operating noise, see diagram page 235. Explanation of technical data page 234.

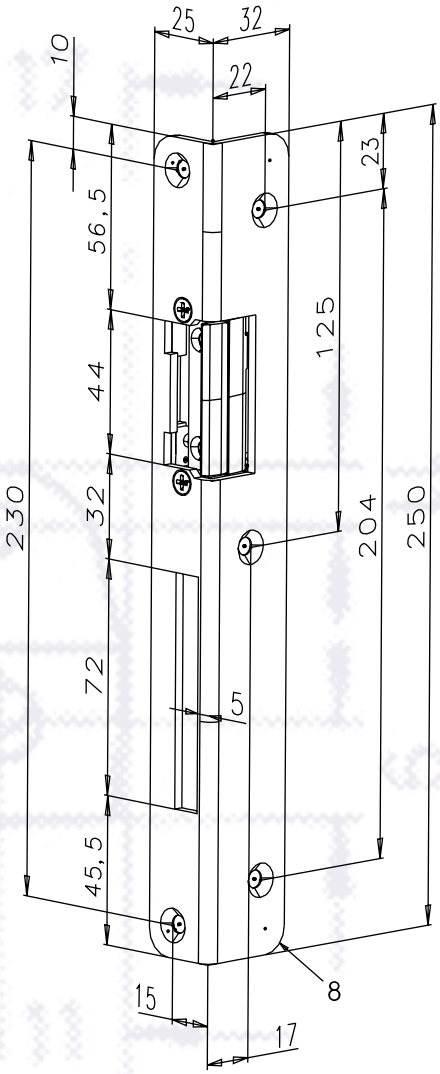

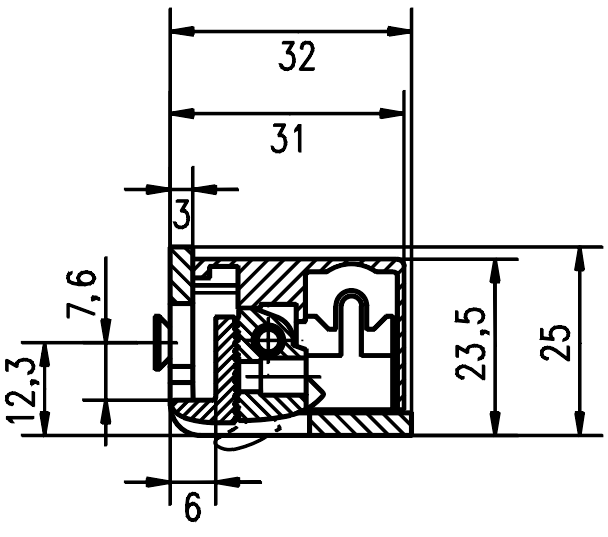

Sectional drawing 1:1

21

In the case of flush fitting doors, the normally central position of the lock in the door leaf means that the engaging edge of the keep is offset towards centre frame. In order to obtain an optically closed design, a **distance of 25 mm** between the door stop and the engaging edge is bridged by the keep guide. The latch bolt must be positioned at the engaging edge of the keep.
If necessary, the keep guide can be shortened.

As the keep is adjusted already in the factory relative to the keep guide, effeff always supplies this combination ready assembled. For smooth, easy running interaction between the latch bolt and the keep guide, it is advisable to round off and grease the tip of the latch bolt.

Model number for combination with 12 V DC access control systems:

1405RR- | 165 | 35 | E3 | 4/5

Mounting example

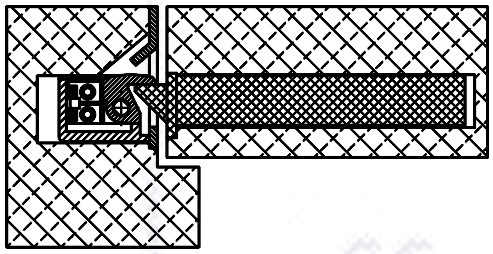

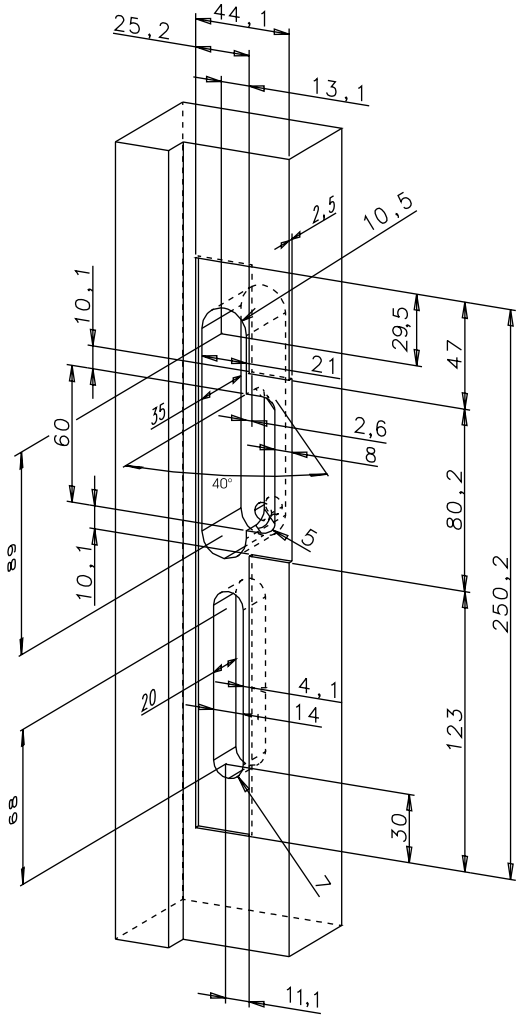

Preparation for mounting

Mounting situation

Illustrated model:
EDP order data:

14E---- | 165 | 35 | D1 | 4/5

Former designation:
14E | LAP | EST | 6-12 V | DL

Specifications	
Break-in resistance	6500 N
Material housing/keep standard	Die-cast zinc/steel
Operating temperature range	-15 °C to +40 °C
Mounting independent of position	Yes

Electrical data At 20 °C		Operating voltage Tolerance range	Rated resistance in Ohm	AC current consumption in mA	DC current consumption in mA (50% Residual ripple)	DC current consumption in mA (stabilized)	Operating noise during AC operation*	Operating noise during DC operation* (50% Residual ripple)	Keep pre-load max. in N with AC	Keep pre-load max. in N with DC (50% Residual ripple)	Keep pre-load max. in N with DC (stabilized)
6-12 V (6-V operation)	DI	as specified	7,7	550	740	780	4	1	160	40	10
6-12 V (12-V operation)	DI	as specified	7,7	1100	1480	1560	4	1	160	100	60

*For operating noise, see diagram page 235. Explanation of technical data page 234.

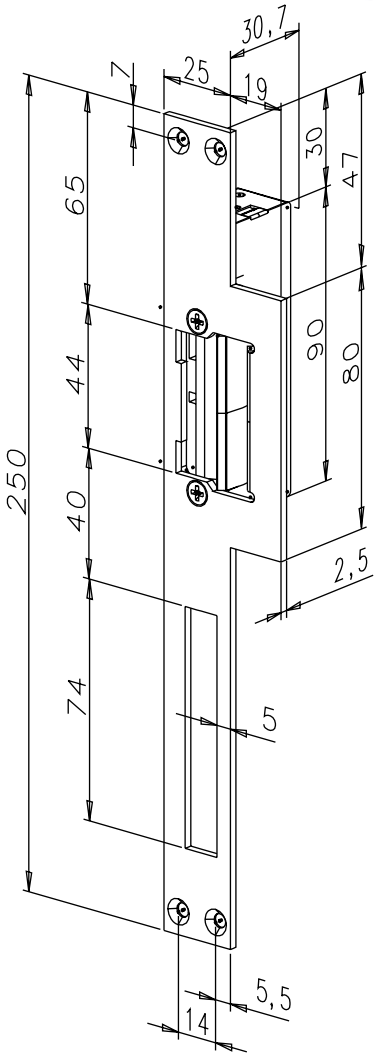

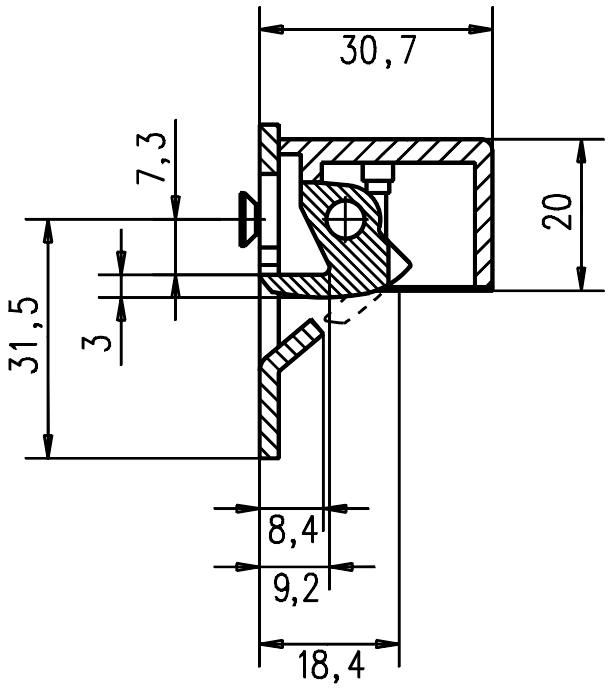

Sectional drawing 1:1

Order data model series 14: Page 37 ➔➔

Balcony and French doors which have to be equipped with door release systems are generally designed with several rebate levels. Here, the optimum solution is to use striking plates which are adjusted to the secondary rebate. For 18 mm secondary rebates (build-up of 8 mm) and 20 mm secondary rebates (build-up of 6 mm), striking plates 042 and 047 can be used.

Model number for combination with 12 V DC access control systems:

1905--- | 042 | 41 | E3 | 4	DL
1905A-- | 042 | 41 | E3 | 5	DR

Mounting example

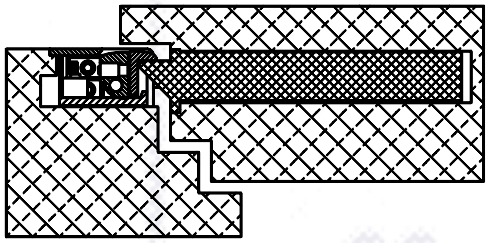

Illustrated model:
EDP order data:

19E---- | 042 | 41 | D1 | 4	DL
19AE--- | 042 | 41 | D1 | 5	DR

Former designation:
19E | iW042 | yellow chromated | 6-12 V | DL

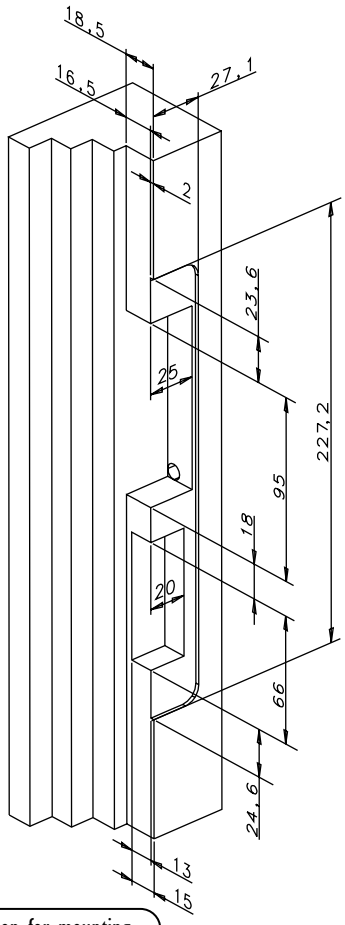

Preparation for mounting

Mounting situation

Specifications and variants: **Strikes:** Page 49 · **Striking plates:** Page 131 ➔➔

Specifications	
Break-in resistance Standard	3000 N
Material housing/keep/surface-m. attachment Fafix	Die-cast zinc/die-cast zinc/brass
Operating temperature range	-15 °C to +40 °C
Mounting independent of position	Yes

Electrical data At 20 °C		Operating voltage Tolerance range	Rated resistance in Ohm	AC current consumption in mA	DC current consumption in mA (50% Residual ripple)	DC current consumption in mA (stabilized)	Operating noise during AC operation*	Operating noise during DC operation* (50% Residual ripple)	Keep pre-load max. in N with AC	Keep pre-load max. in N with DC (50% Residual ripple)	Keep pre-load max. in N with DC (stabilized)
6-12 V (6-V operation)	DI	as specified	7,7	550	740	780	5	1	150	20	10
6-12 V (12-V operation)	DI	as specified	7,7	1100	1480	1560	4	1	120	50	30

*For operating noise, see diagram page 235. Explanation of technical data page 234.

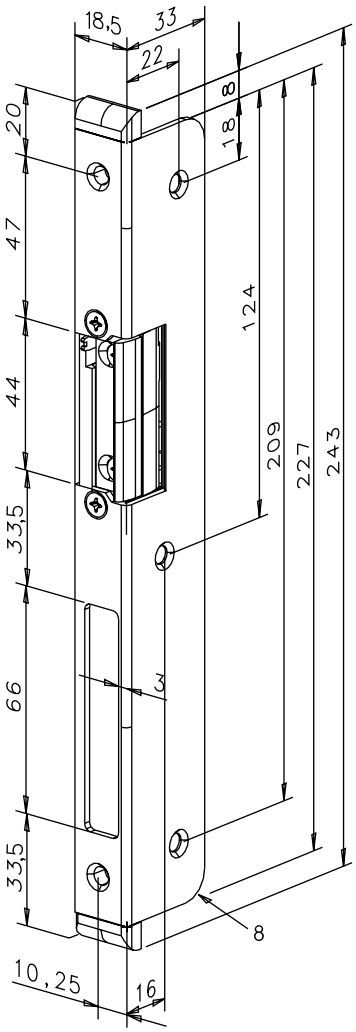

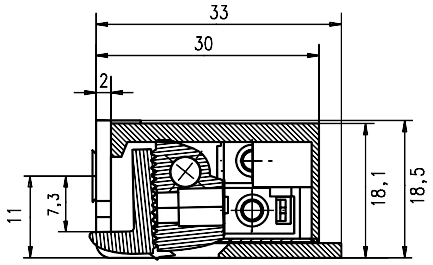

Sectional drawing 1:1

25

Strikes for bevelled rebate geometries are available in 7 different graduations in the form of flat striking plates and as a flat striking plate with keep guide. For use in wooden doors, the striking plates come with a gold-coloured surface finish. The striking plate dimensions are indicated in the drawings / tables for striking plate 021 (standard flat striking plate) and 165 (striking plate with keep guide).

The original bevel specification refers to a 45 mm thick door leaf. The bevel number indicates the difference between the door surface (width) outside and inside in millimetres. For the purpose of comparison, the number of degrees is also specified.

The striking plates are suitable for the strike series 14 and are only supplied with mounted strike. The DIN direction (04 or 05) must be indicated.

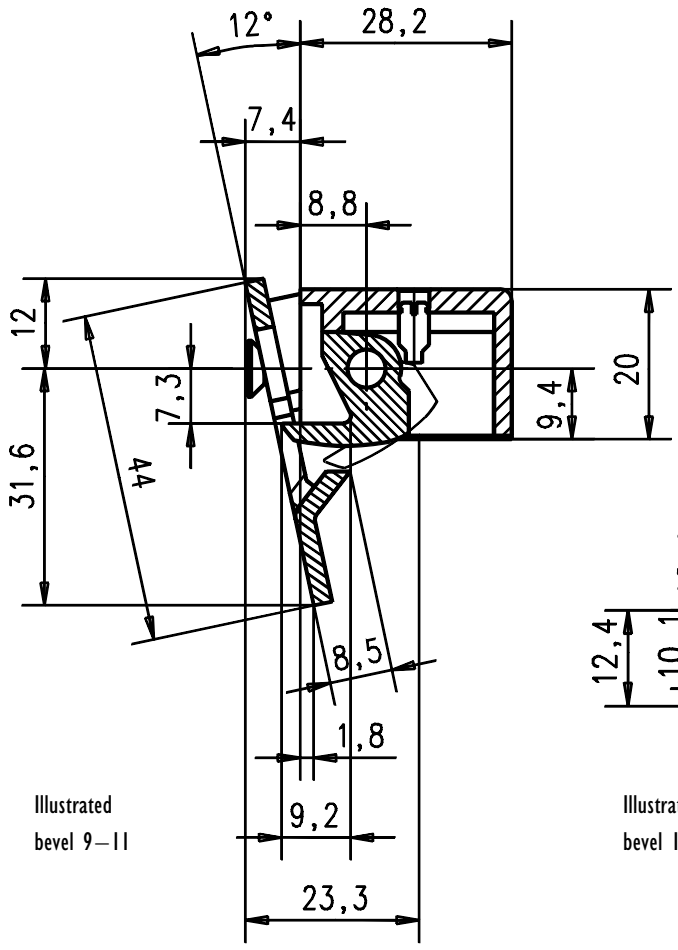

Illustrated bevel 9–11

Model 14 standard

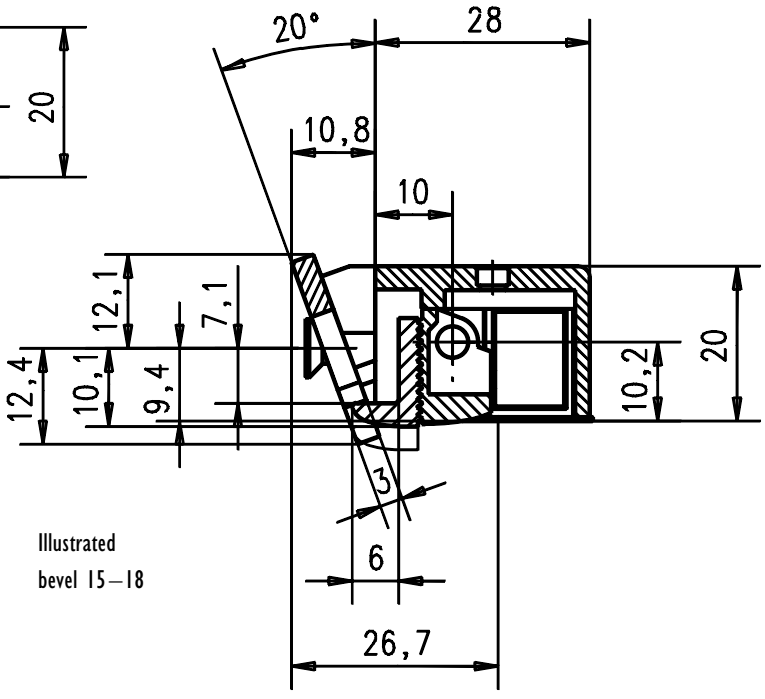

Illustrated bevel 15–18

Sectional drawing 1:1

Model 14 Fafix

Specifications and variants: **Strikes:** Page 37 · **Striking plates:** Pages 151, 199 ➔➔

Specifications

Bevel	Degrees	Striking plate with keep guide EDP no.	Flat striking plate EDP no.
3-5	94 °- 96 °	974	950
6-8	97 °-100 °	976	952
9-11	101 °-104 °	981	955
12-14	105 °-108 °	984	958
15-18	109 °-112 °	985	961
19-22	113 °-116 °	990	968
23-25	117 °-119 °	995	971

Order specifications (example)

Model 14	**Striking plate with keep guide for 101° bevel**	**Gold-coloured**	**6-12 V**	**DIN left**
Digits 1 - 7	Digits 8 - 10	Digits 11 + 12	Digits 13 + 14	Digit 15
14	**981**	**01**	**D1**	**4**

Order specifications (example)

Model 14 Fafix	**Striking plate for 109° bevel**	**Gold-coloured**	**6-12 V**	**DIN right**
Digits 1 - 7	Digits 8 - 10	Digits 11 + 12	Digits 13 + 14	Digit 15
14FF	**961**	**01**	**D1**	**5**

Order data model series 14: Page 37 ➔➔

From professionals for professionals. Put your trust in effeff.

Modern architectural design encompasses a wide spectrum of plastic and aluminium profiles and a wide-ranging choice of door geometries. For almost every conceivable occasion, effeff has a custom-tailored solution to offer: Depending on geometry, either flat striking plates or U-shaped striking plates can be used. The fact that special striking plates from reputable profile manufacturers are equipped with effeff strikes testifies to high standard of quality of the effeff product range.

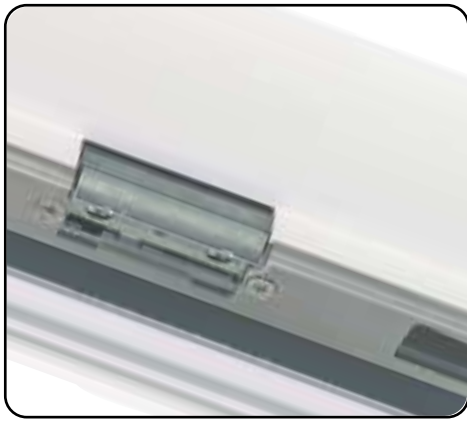

TOP QUALITY. METICULOUSLY ENGINEERED DOWN TO THE LAST DETAIL.

Different doors have different demands made on them. But the same standards are applied to every door and so to every door control system: Top quality and maximum security. The variety of the effeff range and the common basis of all the offered models are unique: Individually designed and meticulously engineered down to the last detail.

The broad-based effeff product range encompasses door release systems for doors of all types of material. You have decided to opt for plastic and aluminium profiles. The fact that special striking plates from reputed profile manufacturers are supplied direct with door release systems from effeff testifies to the outstanding quality of our products in this segment.

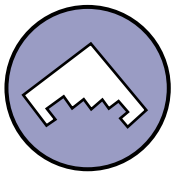

Plastic and aluminium profiles

As a result of the different profile formations, striking plates and locks have to be adjusted to the individual circumstances. The strike can be shifted forward using U-striking plates in order to avoid the need to remove more material for the latch bolt in the frame profile (from page 30).

effeff offers complete door control systems for the preferential design type.

INDIVIDUAL MODEL? LEAVE IT TO US!

Alongside the most popularly used models, effeff also holds a wide stock of other door control variants: Individual solutions for every door. Simply ask us - we will be pleased to help you.

In this field, a whole range of different profile formations exist to which the relevant striking plates and locks have to be adapted. For the most common profiles, the distance between the face plate and the striking plate has to be bridged. To avoid the need to remove further material for the latch bolt in the frame profile, the strike can be shifted forward using U-shaped striking plates. A special benefit for effeff customers: Striking plates adapted specifically to their profiles are offered direct by reputed profile manufacturers. Riveting nuts, plastic end caps and fixing screws are included in the scope of delivery.

Model number for combination with 12 V DC access control systems:

11605RR | 391 | 35 | E4 | 4/5

Mounting example

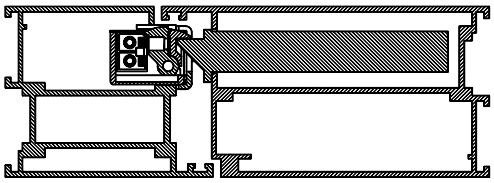

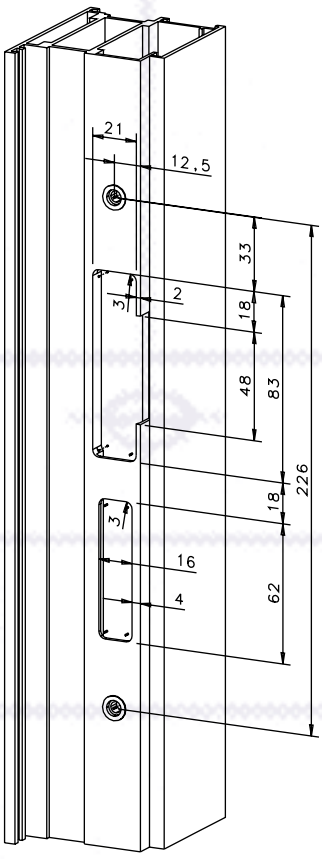

Preparation for mounting

Mounting situation

Illustrated model:
EDP order data:

116E--- | 391 | 35 | D1 | 4/5

Former designation:
116E | with U-shaped striking plate | EST | 6-12 V | DL

Specifications and variants: **Strikes:** Page 51 · **Striking plates:** Page 159 ➔➔

Specifications	
Break-in resistance	5000 N
Material housing/keep/surface-m. attachment	Die-cast zinc/die-cast zinc/die-cast zinc
Operating temperature range	-15 °C to +40 °C
Mounting independent of position	Yes

Electrical data At 20 °C		Operating voltage Tolerance range	Rated resistance in Ohm	AC current consumption in mA	DC current consumption in mA (50% Residual ripple)	DC current consumption in mA (stabilized)	Operating noise during AC operation*	Operating noise during DC operation* (50% Residual ripple)	Keep pre-load max. in N with AC	Keep pre-load max. in N with DC (50% Residual ripple)	Keep pre-load max. in N with DC (stabilized)
6-12 V (6-V operation)	DI	as specified	9,0	550	630	665	5	1	160	140	10
6-12 V (12-V operation)	DI	as specified	9,0	1050	1150	1330	5	2	160	150	90

*For operating noise, see diagram page 235. Explanation of technical data page 234.

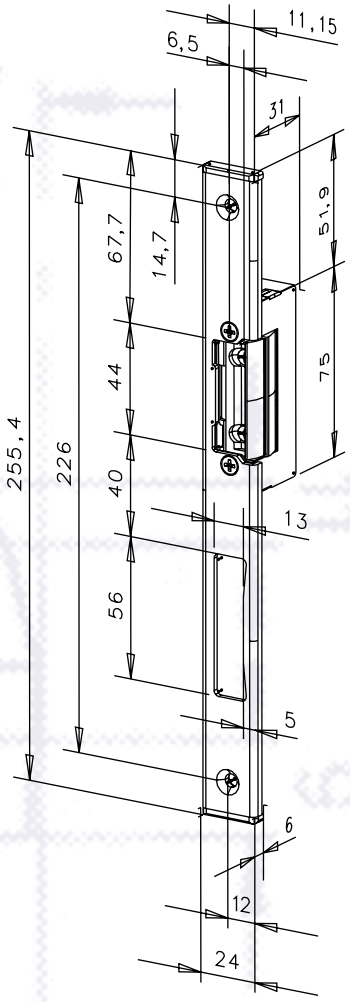

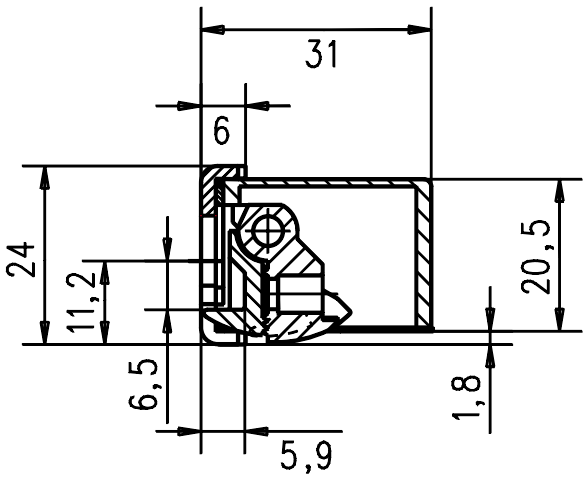

Sectional drawing 1:1

The right model for every occasion.
From effeff

As a competent partner to the building industry, we are able to comply with individual requirements imposed by our customers when it comes to added security as well as smoke and fire protection. In the field of special doors, we pay particular attention to the deployment of strikes under all kinds of weather conditions. And for other special applications such as glass doors, dead bolt locks with key, surface-mounted types as well as sliding and swing doors, pneumatic systems, electronic monitoring systems, panic bars and much more, you will find the right model waiting for you in the effeff range.

CAN'T IS NOT IN OUR VOCABULARY. effeff OPENS UP NEW PERSPECTIVES.

Doors for use in special circumstances have to be fitted with special door release systems. For the broad spectrum of special doors, effeff offers a wide range of solutions to open up whole new perspectives.

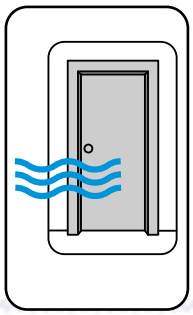

Water-resistant strikes
from page 56

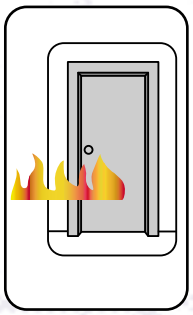

Fire doors/fire barriers
from page 68

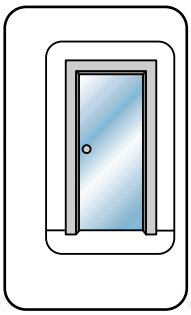

Glass door
from page 86

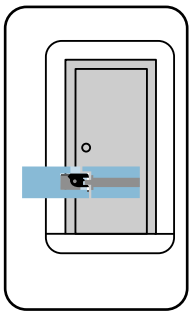

Dead bolt locks with key
from page 94

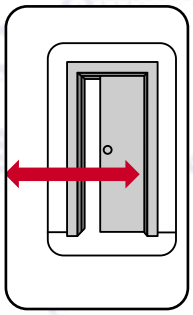

Sliding doors
from page 100

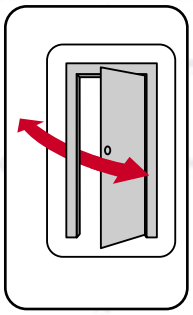

Swing doors
from page 104

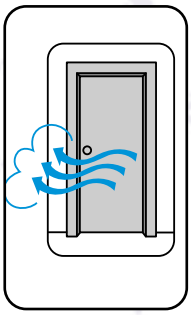

Pneumatic systems
from page 106

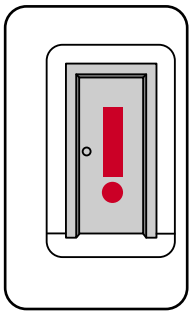

Strikes for special applications
from page 108

effeff offers complete door control systems for the eight standard design types.

INDIVIDUAL MODEL? LEAVE IT TO US!

Alongside the most popularly used models, effeff also holds a wide stock of other door control variants: Individual solutions for every door. Simply ask us - we will be pleased to help you.

Addressing individual needs straight away.

Every building designer or owner has his own very personal ideas, every company its particular concern - and each door has its special fixtures: effeff offers you a range of unique door release systems which are designed and assembled precisely in line with your own individual requirements. As a professional, you develop concepts which we the recognized specialists in the field will be able to implement. Simply define the electrical data and the mechanical function using the data sheet for the strike you require, and then select the striking plate for your specific mounting situation and decide on the design. These individual requirements are put together by you in the order form, and effeff will quickly supply the solution. For subsequent combination, striking plates and strikes can also be separately ordered, with the sole exception of striking plates with keep guide.

➔ This catalogue is designed to allow you to track down the system that's right for you using a special procedure. Simply open out a page…

Striking plate data

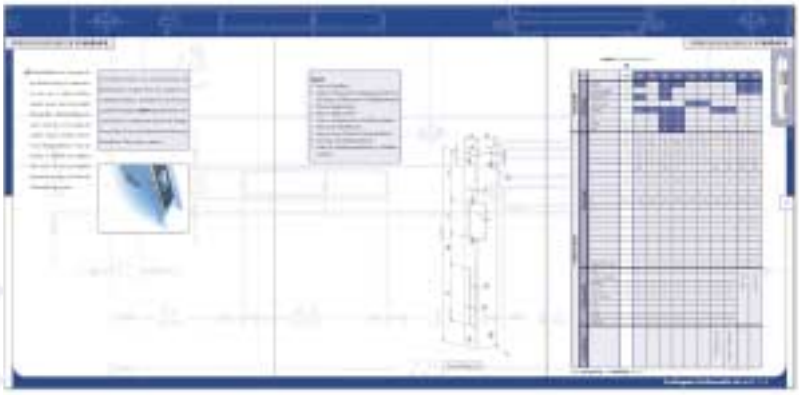

➔ …and the clear layout puts you perfectly in the picture. At a glance…

Strike data

➔ …you can survey the electrical strike data and the technical data for the striking plate, making it simple for you to submit a precise purchase order.

- The universal strike in a solid design
- Suitable for all commonly used striking plates
- Combinable with striking plates with keep guide (standard) without FaFix
- Can be mounted DIN right or left by turning over 180°

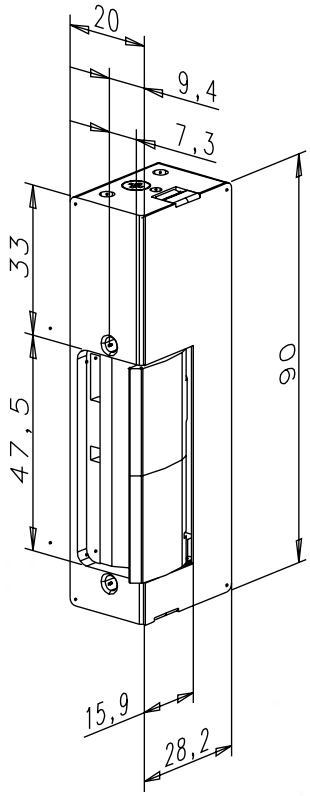

Fafix version (FF)

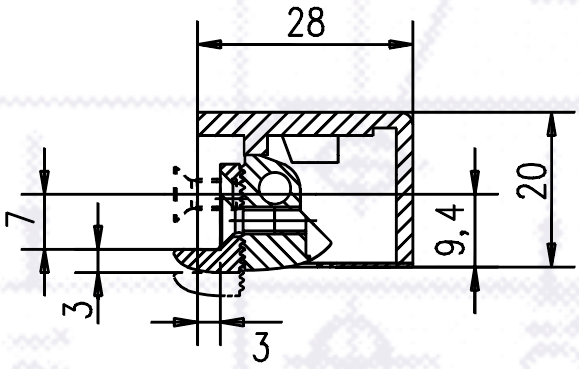

Standard version

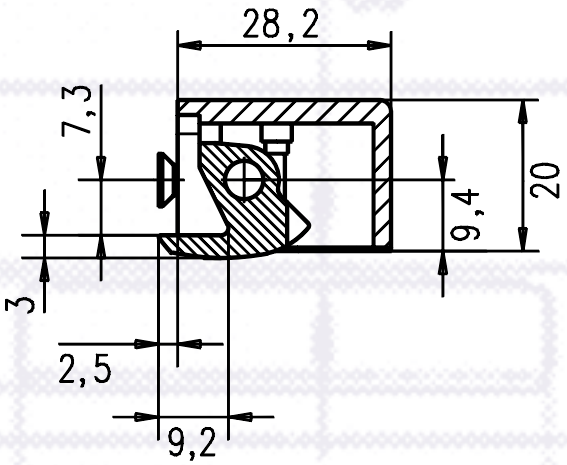

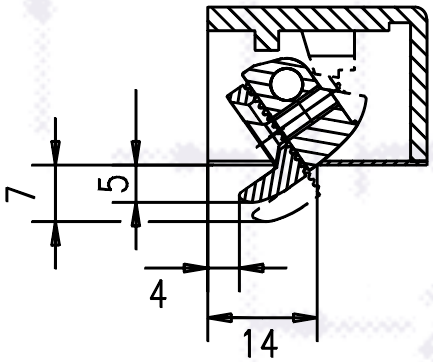

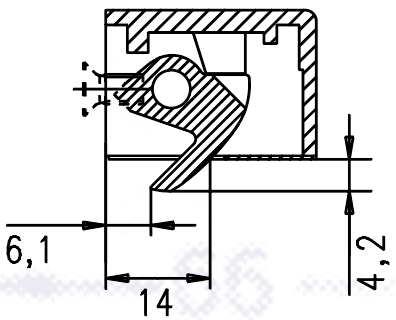

Sectional drawing 1:1

Striking plates: Page 123 ➔➔

Specifications	
Standard break-in resistance	6500 N
FaFix break-in resistance	4000 N
Material: Standard housing/keep	Die-cast zinc/steel
Material: Housing/keep/	Die-cast zinc/die-cast zinc/brass
Operating temperature range	-15 °C to +40 °C
Mounting independent of position	Yes

Electrical data At 20 °C		Operating voltage Tolerance range	Rated resistance in Ohm	AC-Current consumption in mA	DC-Current consumption in mA (50% Residual ripple)	DC-Current consumption in mA (stabilized)	Operating noise during AC operation*	Operating noise during DC operation* (50% Residual ripple)	Keep pre-load max. in N with AC	Keep pre-load max. in N with DC (50% Residual ripple)	Keep pre-load max. in N with DC (stabilized)
6-12 V (6-V operation)	D1	as specified	7,7	550	740	780	4	1	160	40	10
6-12 V (12-V operation)	D1	as specified	7,7	1100	1480	1560	4	1	160	100	60
8-16 V (8-V operation)	R1	as specified	16,5	350	470	485	4	1	110	10	10
8-16 V (12-V operation)	R1	as specified	16,5	500	710	725	4	1	80	20	10
8-16 V (16-V operation)	R1	as specified	16,5	700	940	970	4	1	100	40	20
12 V Intercom	E5	±1,8 V	30,0	290	385	400	3	0	90	40	20
12 V eE	E3	±1 V	60,0	125	190	200	3	0	100	50	40
24 V eE	F3	±2 V	235,0	70	100	102	3	0	80	35	25
12 V fail-unlocked 3-type	E9	±1 V	61,0		180	195		0		10	10
24 V fail-unlocked 3-type	F9	±2 V	230,0		100	105		0		10	10

*For operating noise, see diagram page 235. Explanation of technical data page 234.

Order data, model series 14, 24, 34 — **Order number** = blue area

Model		Mechanical unlocking		Design		Striking plate		Colour		Voltage		DIN orientation	
Digits 1 - 7						Digits 8 - 10		Digits 11 + 12		Digits 13 + 14		Digit 15	
14	14	E	E	FAFIX	FF	HZ	021	EST	35	6-12 V	D1	UNI	I
24	24			FIX	F	iW	324	galvanized	40	8-16 V	R1	DL	4
34	34					HZF	033	grey	02	12 V Intercom	E5	DR	5
1405	1405					kL	096	gold	01	12 V eE	E3		
3405	3405									24 V eE	F3		
										Fail unlocked 12 V (34)	E9		
										Fail unlocked 24 V (34)	F9		

With order data F (FIX) use striking plates with fixing grooves (e.g. 051, 287, 457, 099). E and fail unlocked cannot be combined.

Possible combinations are indicated in the striking plate tables.

For possible colours, see page 236.

Only specify 12 or 24 V fail unlocked with model 34 / 3405.

For indication of the DIN orientation, please note the striking plate table and the selected striking plate.

Transfer number to order fax sheet on page 242.

*For possible combinations, please see the price list. Striking plates with keep guide are only supplied with mounted strike.
Striking plates with keep guide (HZF, KF, LAP) cannot be combined with FIX and FAFIX.
The keep is adjusted in the factory to the keep guide. The first 7 digits can vary for special models. Please enquire with us regarding the designation for special models.

- The universal strike in a solid design
- Suitable for all commonly used striking plates
- Combinable with striking plates with keep guide (standard design)
- Mirror-inverted version = DIN right (DR = 5)

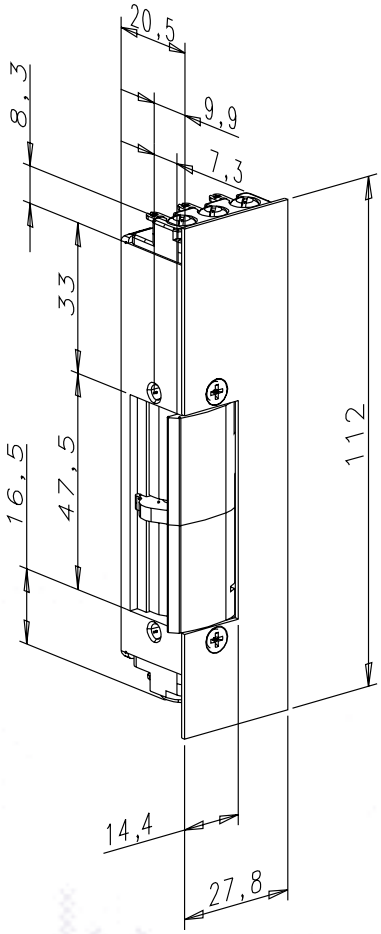

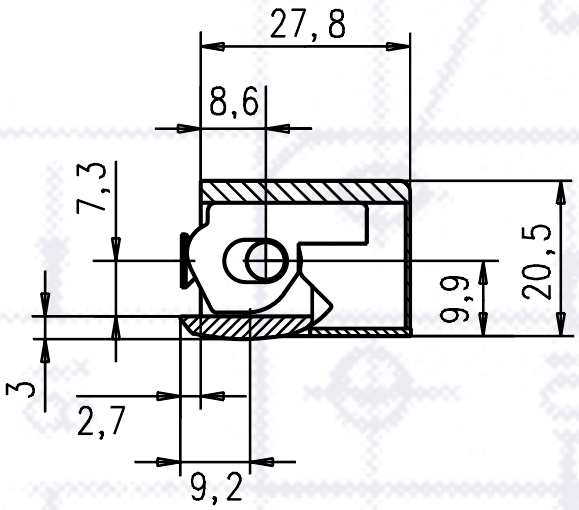

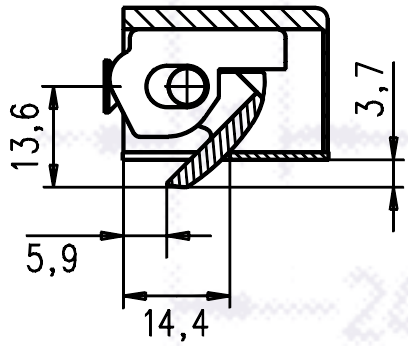

Sectional drawing 1:1

Striking plates: Page 123 ➔➔

Specifications	
Standard break-in resistance	5000 N
Material: Standard housing/keep	Die-cast zinc/steel
Operating temperature range	-15 °C to +40 °C
Mounting independent of position	No

Electrical data At 20 °C		Operating voltage Tolerance range	Rated resistance in Ohm	AC-Current consumption in mA	DC-Current consumption in mA (50% Residual ripple)	DC-Current consumption in mA (stabilized)	Operating noise during AC operation*	Operating noise during DC operation* (50% Residual ripple)	Keep pre-load max. in N with AC	Keep pre-load max. in N with DC (50% Residual ripple)	Keep pre-load max. in N with DC (stabilized)
6-12 V (6-V operation)	D1	as specified	7,7	550	740	780	4	1	160	40	10
6-12 V (12-V operation)	D1	as specified	7,7	1100	1480	1560	4	1	160	100	60
8-16 V (8-V operation)	R1	as specified	16,5	350	470	485	4	1	110	10	10
8-16 V (12-V operation)	R1	as specified	16,5	500	710	725	4	1	80	20	10
8-16 V (16-V operation)	R1	as specified	16,5	700	940	970	4	1	100	40	20
12 V Intercom	E5	±1,8 V	30,0	290	385	400	3	0	90	40	20
12 V eE	E3	±1 V	60,0	125	190	200	3	0	100	50	40
24 V eE	F3	±2 V	235,0	70	100	102	3	0	80	35	25
12 V fail-unlocked 3-type	E9	±1 V	61,0		180	195		0		10	10
24 V fail-unlocked 3-type	F9	±2 V	230,0		100	105		0		10	10

*For operating noise, see diagram page 235. Explanation of technical data page 234.

Order data, model series 14RR, 24RR, 34RR — **Order number** = blue area

Model		Design		Striking plate		Colour		Voltage		DIN orientation	
Digits 1 - 7				Digits 8 - 10		Digits 11 + 12		Digits 13 + 14		Digit 15	
14RR	14RR	FIX	F	HZ	021	EST	35	6-12 V	D1	DL	4
24RR	24RR			iW	066	galvanized	40	8-16 V	R1	DR	5
34RR	34RR			HZF	033	grey	02	12 V Sprechanlaage	E5		
1405RR	1405RR			kL	120	gold	01	12 V eE	E3		
3405RR	3405RR			Possible combinations are indicated in the striking plate tables.		For possible colours, see page 236.		24 V eE	F3		
								Fail unlocked 12 V (34)	E9	For indication of the DIN orientation, please note the striking plate table and the selected striking plate.	
								Fail unlocked 24 V (34)	F9		
								Only specify 12 or 24 V fail unlocked with model 34, 34RR, 3405RR.			

→ Transfer number to order fax sheet on page 242.

*For possible combinations, please see the price list. Striking plates with keep guide are only supplied with mounted strike.
Striking plates with keep guide (HZF, KF, LAP) cannot be combined with FIX and FAFIX.
The keep is adjusted in the factory to the keep guide. The first 7 digits can vary for special models. Please enquire with us regarding the designation for special models.

- Model 14A supplements the standard 14 model series to include the mirror-inverted version. However, the connecting terminals are not recessed but mounted.
- The universal strike in a solid design
- Suitable for all commonly used striking plates
- Combinable with striking plates with keep guide (standard design) without FaFix
- Can be mounted DIN right or left by turning over 180°

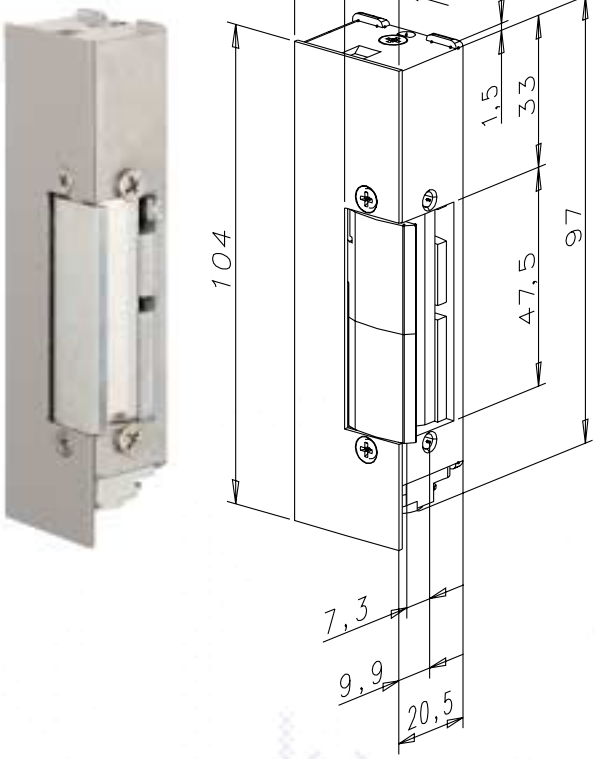

Sectional drawing 1:1

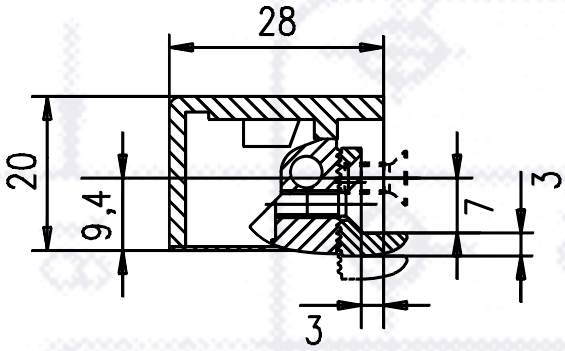

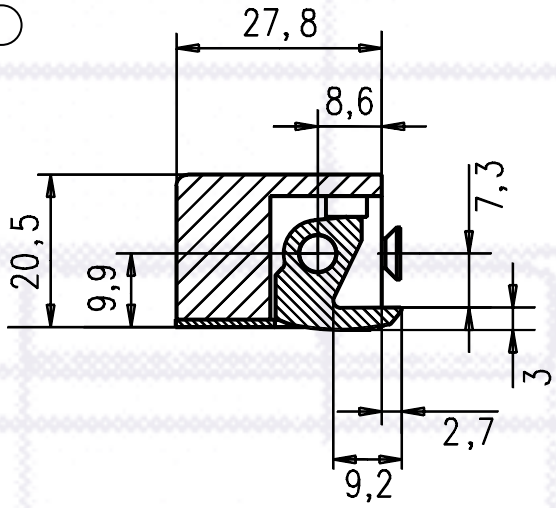

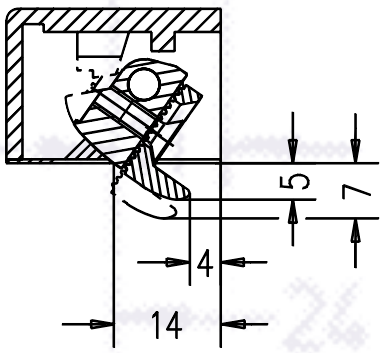

Fafix version (FF)

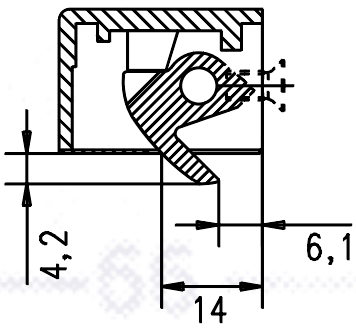

Standard version

Striking plates: Page 123 ➔➔

Specifications	
Standard break-in resistance	6500 N
Fafix break-in resistance	4000 N
Material: Standard housing/keep	Die-cast zinc/steel
Material: Housing/keep/surface-m. attachment Fafix	Die-cast zinc/die-cast zinc/brass
Operating temperature range	-15 °C to +40 °C
Mounting independent of position	Yes

Electrical data At 20 °C		Operating voltage Tolerance range	Rated resistance in Ohm	AC-Current consumption in mA	DC-Current consumption in mA (50% Residual ripple)	DC-Current consumption in mA (stabilized)	Operating noise during AC operation*	Operating noise during DC operation* (50% Residual ripple)	Keep pre-load max. in N with AC	Keep pre-load max. in N with DC (50% Residual ripple)	Keep pre-load max. in N with DC (stabilized)
6-12 V (6-V operation)	D1	as specified	7,7	550	740	780	4	1	160	40	10
6-12 V (12-V operation)	D1	as specified	7,7	1100	1480	1560	4	1	160	100	60
8-16 V (8-V operation)	R1	as specified	16,5	350	470	485	4	1	110	10	10
8-16 V (12-V operation)	R1	as specified	16,5	500	710	725	4	1	80	20	10
8-16 V (16-V operation)	R1	as specified	16,5	700	940	970	4	1	100	40	20
12 V Intercom	E5	±1,8 V	30,0	290	385	400	3	0	90	40	20
12 V eE	E3	±1 V	60,0	125	190	200	3	0	100	50	40
24 V eE	F3	±2 V	235,0	70	100	102	3	0	80	35	25
12 V fail-unlocked 3-type	E9	±1 V	61,0		180	195		0		10	10
24 V fail-unlocked 3-type	F9	±2 V	230,0		100	105		0		10	10

*For operating noise, see diagram page 235. Explanation of technical data page 234.

Order data, model series 14A, 24A, 34A — **Order number** = blue area

Model		Mechanical unlocking		Design		Striking plate		Colour		Voltage		DIN orientation	
Digits 1 - 7						Digits 8 - 10		Digits 11 + 12		Digits 13 + 14		Digit 15	
14GRM	14A	E	E	FAFIX	FF	HZ	021	EST	35	6-12 V	D1	UNI	I
24GRM	24A			FIX	F	iW	324	galvanized	40	8-16 V	R1	DR	5
34GRM	34A					HZF	033	grey	02	12 V Intercom	E5		
1405GRM	1405A							gold	01	12 V eE	E3		
3405GRM	3405A									24 V eE	F3		
										Fail unlocked 12 V (34)	E9		
										Fail unlocked 24 V (34)	F9		

With order data F (FIX) use striking plates with fixing grooves (e.g. 051, 287, 457, 099). E and fail unlocked cannot be combined.

Possible combinations are indicated in the striking plate tables.

For possible colours, see page 236.

Only specify 12 or 24 V fail unlocked with model 34 GRM/ 3405GRM.

For indication of the DIN orientation, please note the striking plate table and the selected striking plate.

Transfer number to order fax sheet on page 242.

*For possible combinations, please see the price list. Striking plates with keep guide are only supplied with mounted strike.
Striking plates with keep guide (HZF, KF, LAP) cannot be combined with FIX and FAFIX.
The keep is adjusted in the factory to the keep guide. The first 7 digits can vary for special models. Please enquire with us regarding the designation for special models.

- The minimal distance between the keep and the underneath of the housing in the DL and DR version permits combination with locks with minimal keep-dead bolt spacing.
- For striking plates with minimal keep-dead bolt spacing (see striking plate table)
- The universal strike in a solid design
- Suitable for all commonly used striking plates
- Combinable with striking plates with keep guide (without FaFix) standard

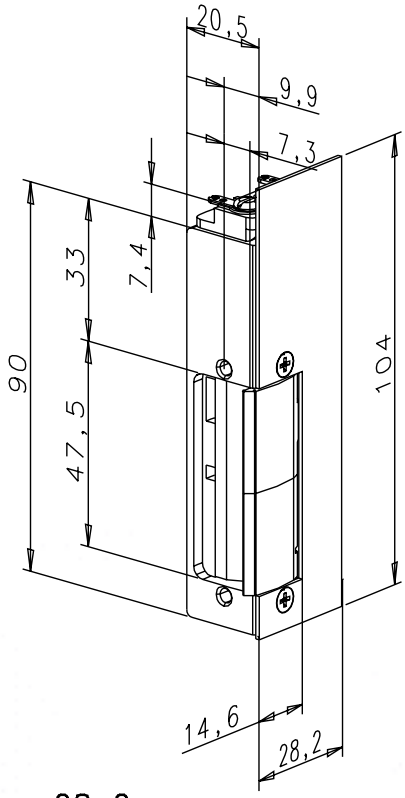

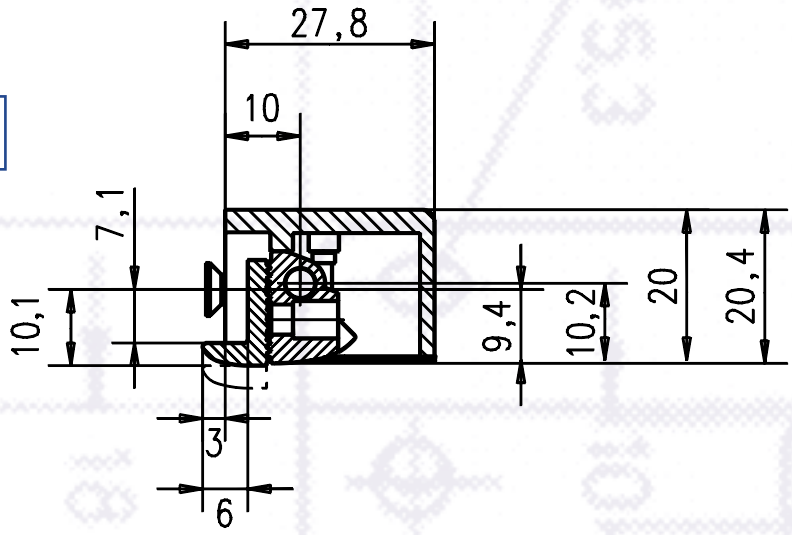

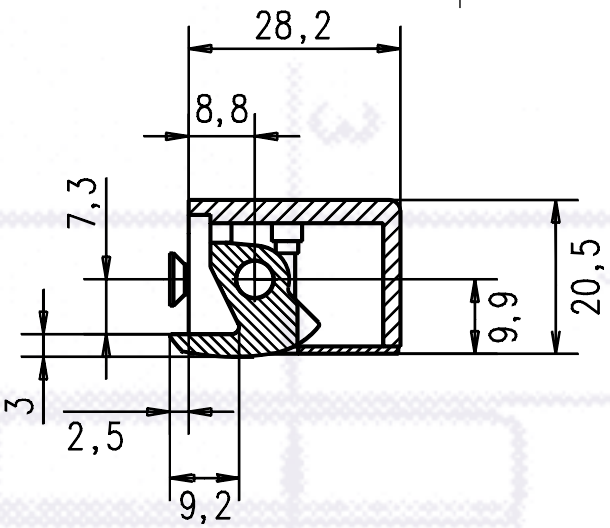

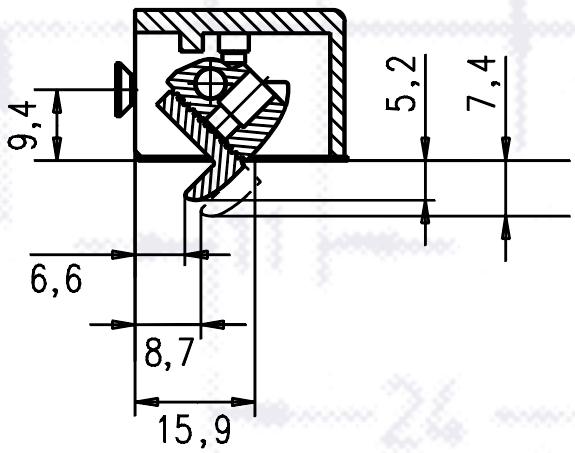

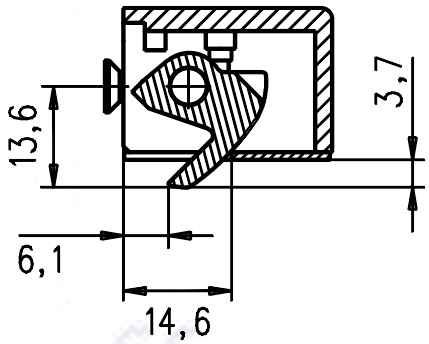

Sectional drawing 1:1

Striking plates: Page 151 ➔➔

Specifications	
Break-in resistance Standard	6500 N
Break-in resistance FaFix	4000 N
Material: Standard housing/keep	Die-cast zinc/steel
Material: Housing/keep/surface-m. attachment Fafix	Die-cast zinc/die-cast zinc/brass
Operating temperature range	-15 °C to +40 °C
Mounting independent of position	No

Electrical data At 20 °C		Operating voltage Tolerance range	Rated resistance in Ohm	AC-Current consumption in mA	DC-Current consumption in mA (50% Residual ripple)	DC-Current consumption in mA (stabilized)	Operating noise during AC operation*	Operating noise during DC operation* (50% Residual ripple)	Keep pre-load max. in N with AC	Keep pre-load max. in N with DC (50% Residual ripple)	Keep pre-load max. in N with DC (stabilized)
6-12 V (6-V operation)	D1	as specified	7,7	550	740	780	4	1	160	40	10
6-12 V (12-V operation)	D1	as specified	7,7	1100	1480	1560	4	1	160	100	60
8-16 V (8-V operation)	R1	as specified	16,5	350	470	485	4	1	110	10	10
8-16 V (12-V operation)	R1	as specified	16,5	500	710	725	4	1	80	20	10
8-16 V (16-V operation)	R1	as specified	16,5	700	940	970	4	1	100	40	20
12 V Intercom	E5	±1,8 V	30,0	290	385	400	3	0	90	40	20
12 V eE	E3	±1 V	60,0	125	190	200	3	0	100	50	40
24 V eE	F3	±2 V	235,0	70	100	102	3	0	80	35	25
12 V fail-unlocked 3-type	E9	±1 V	61,0		180	195		0		10	10
24 V fail-unlocked 3-type	F9	±2 V	230,0		100	105		0		10	10

*For operating noise, see diagram page 235. Explanation of technical data page 234.

Order data, model series 14S, 24S, 34S — **Order number** = blue area

Model		Mechanical unlocking		Design		Striking plate		Colour		Voltage		DIN orientation	
Digits 1 - 7						Digits 8 - 10		Digits 11 + 12		Digits 13 + 14		Digit 15	
14S	14S	E	E	FAFIX	FF	HZ	264	EST	35	6-12 V	D1	DR	5
24S	24S			FIX	F	HZF	314	galvanized	40	8-16 V	R1	DL	4
34S	34S					kL	098	grey	02	12 V Intercom	E5		
1405S	1405S					kF	271	gold	01	12 V eE	E3		
3405S	3405S									24 V eE	F3		
										Fail unlocked 12 V (34)	E9		
										Fail unlocked 24 V (34)	F9		

With order data F (FIX) use striking plates with fixing grooves (e.g. 051, 287, 457, 099). E and fail unlocked cannot be combined.

Possible combinations are indicated in the striking plate tables.

For possible colours, see page 236.

Only specify 12 or 24 V fail unlocked with model 34S/3405S.

For indication of the DIN orientation, please note the striking plate table and the selected striking plate.

*For possible combinations, please see the price list. Striking plates with keep guide are only supplied with mounted strike.
Striking plates with keep guide (HZF, KF, LAP) cannot be combined with FIX and FAFIX.
The keep is adjusted in the factory to the keep guide. The first 7 digits can vary for special models. Please enquire with us regarding the designation for special models.

→ Transfer number to order fax sheet on page 242.

- The universal strike standard with FaFix (FF)
- Suitable for all commonly used striking plates
- Can be mounted DIN right or left by turning over 180°
- Symmetrical design

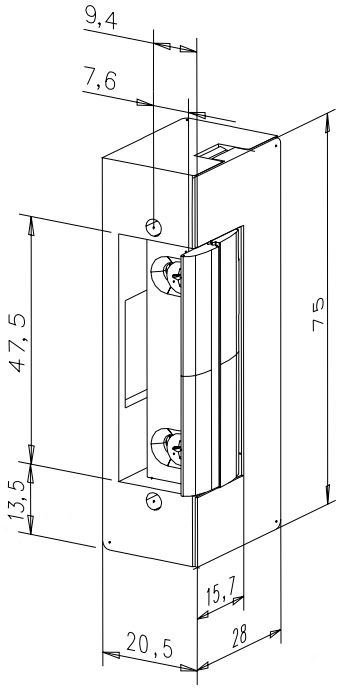

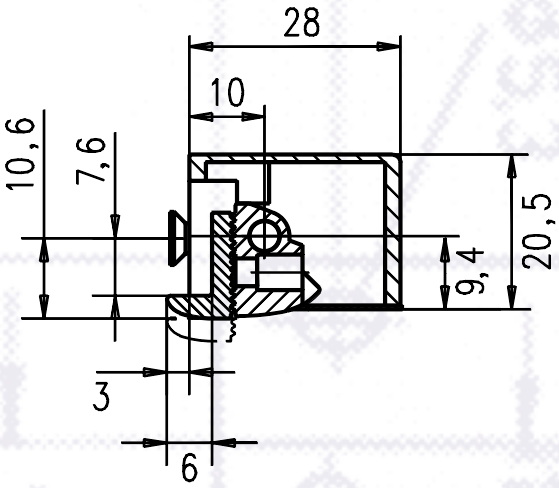

Sectional drawing 1:1

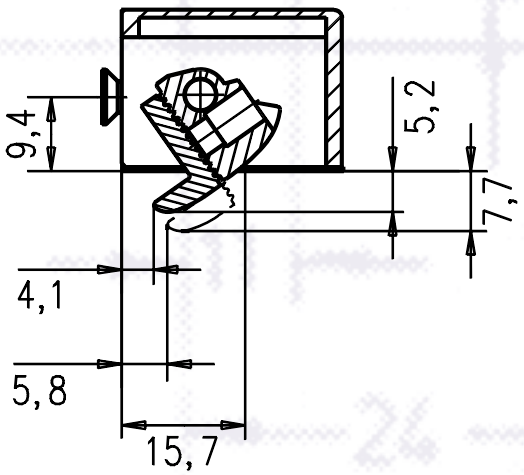

Striking plates: Page 123 ➔➔

Specifications	
Break-in resistance Standard	3500 N
Material: Housing/keep/surface-m. attachment Fafix	Die-cast zinc/die-cast zinc/brass
Operating temperature range	-15 °C to +40 °C
Mounting independent of position	Yes

Electrical data At 20 °C		Operating voltage Tolerance range	Rated resistance in Ohm	AC-Current consumption in mA	DC-Current consumption in mA (50% Residual ripple)	DC-Current consumption in mA (stabilized)	Operating noise during AC operation*	Operating noise during DC operation* (50% Residual ripple)	Keep pre-load max. in N with AC	Keep pre-load max. in N with DC (50% Residual ripple)	Keep pre-load max. in N with DC (stabilized)
6-12 V (6-V operation)	D1	as specified	9,1	550	630	660	5	1	80	80	10
6-12 V (12-V operation)	D1	as specified	9,1	1100	1200	1300	5	1	150	90	50
8-16 V (8-V operation) replaces 12 V Intercom	R1	as specified	22,0	310	350	360	4	1	60	80	10
8-16 V (12-V operation) replaces 12 V Intercom	R1	as specified	22,0	470	520	550	5	2	150	50	10
8-16 V (16-V operation) replaces 12 V Intercom	R1	as specified	22,0	620	690	730	5	2	150	50	10
12 V 100% ED	E4	±1 V	44,0		260	270		0		30	10
24 V 100% ED	F4	±2 V	200,0		115	120		0		20	10
12 V fail-unlocked 3-type	E9	±1 V	51,0		225	235		0		10	10
24 V fail-unlocked 3-type	F9	±2 V	160,0		140	150		0		10	10

*For operating noise, see diagram page 235. Explanation of technical data page 234.

Order data, model series 17, 27, 37 — **Order number** = blue area

Model		Design		Striking plate		Colour		Voltage		DIN orientation	
Digits 1 - 7				Digits 8 - 10		Digits 11 + 12		Digits 13 + 14		Digit 15	
17	17	E	E	HZ	021	EST	35	6-12 V	D1	UNI	1
27	27	FAFIX = standard		iW	324	galvanized	40	8-16 V	R1	DL	4
37	37			iW3	277	grey	02	12 V Intercom	E5	DR	5
1705	1705			kL	106	gold	01	12 V 100% ED	E4		
3705	3705			HZ	338			24 V 100% ED	F4		
		E and fail unlocked cannot be combined.				For possible colours, see page 236.		Fail unlocked 12 V (37)	E9	For indication of the DIN orientation, please note the striking plate table and the selected striking plate.	
								Fail unlocked 24 V (37)	F9		
								R1 will replace E5.			

*For possible combinations, please see the price list
The first 7 digits can vary for special models. Please enquire with us regarding the designation for special models.

→ Transfer number to order fax sheet on page 242.

- The universal strike standard with FaFix (FF)
- Suitable for all commonly used striking plates
- Can be mounted DIN right or left by turning over 180°
- Symmetrical design with surface-mounted monitoring contact
- DIN right mounted, monitoring contact below

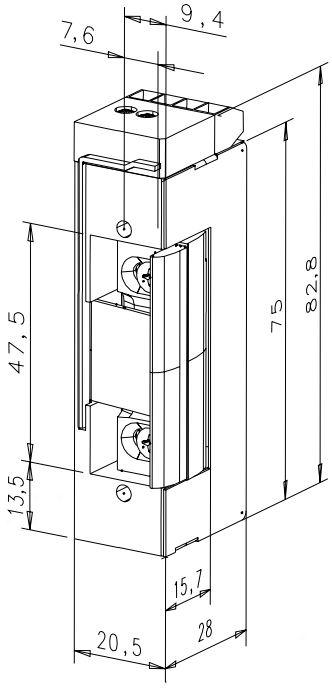

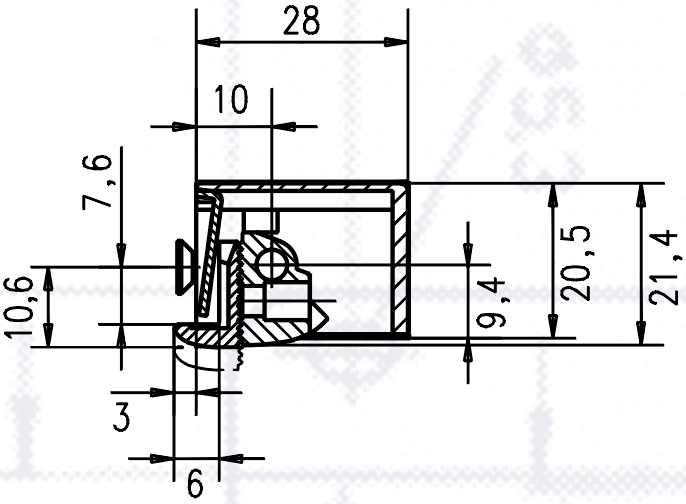

Sectional drawing 1:1

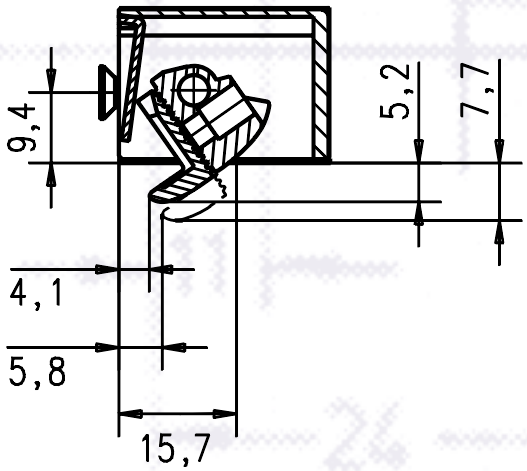

Striking plates: Page 123 ➔➔

Specifications	
Break-in resistance Standard	3500 N
Material: Housing/keep/surface-m. attachment Fafix	Die-cast zinc/die-cast zinc/brass
Operating temperature range	-15 °C to +40 °C
Mounting independent of position	Yes

Electrical data At 20 °C		Operating voltage Tolerance range	Rated resistance in Ohm	AC-Current consumption in mA	DC-Current consumption in mA (50% Residual ripple)	DC-Current consumption in mA (stabilized)	Operating noise during AC operation*	Operating noise during DC operation* (50% Residual ripple)	Keep pre-load max. in N with AC	Keep pre-load max. in N with DC (50% Residual ripple)	Keep pre-load max. in N with DC (stabilized)
6-12 V (6-V operation)	D1	as specified	9,1	550	630	660	5	1	80	80	10
6-12 V (12-V operation)	D1	as specified	9,1	1100	1200	1300	5	1	150	90	50
8-16 V (8-V operation) replaces 12 V Intercom	R1	as specified	22,0	310	350	360	4	1	60	80	10
8-16 V (12-V operation) replaces 12 V Intercom	R1	as specified	22,0	470	520	550	5	2	150	50	10
8-16 V (16-V operation) replaces 12 V Intercom	R1	as specified	22,0	620	690	730	5	2	150	50	10
12 V 100% ED	E4	±1 V	44,0		260	270	3	0		30	10
24 V 100% ED	F4	±2 V	200,0		115	120	3	0		20	10
12 V fail-unlocked 3-type	E9	±1 V	51,0		225	235		0		10	10
24 V fail-unlocked 3-type	F9	±2 V	160,0		140	150		0		10	10

*For operating noise, see diagram page 235. Explanation of technical data page 234.

Order data, model series 17RR, 37RR — **Order number** = blue area

Model		Design		Striking plate		Colour		Voltage		DIN orientation	
Digits 1 - 7				Digits 8 - 10		Digits 11 + 12		Digits 13 + 14		Digit 15	
17RR	17RR	E	E	HZ	021	EST	35	6-12 V	D1	UNI	1
37RR	37RR	FAFIX = standard		iW	324	galvanized	40	8-16 V	R1	DL	4
1705RR	1705RR			kL	096	grey	02	12 V Intercom	E5	DR	5
3705RR	3705RR			Possible combinations are indicated in the striking plate tables.		gold	01	12 V 100% ED	E4	For indication of the DIN orientation, please note the striking plate table and the selected striking plate.	
E and fail unlocked cannot be combined.						For possible colours, see page 236.		24 V 100% ED	F4		
								Fail unlocked 12 V (37)	E9		
								Fail unlocked 24 V (37)	F9		
								R1 will replace E5.			

*For possible combinations, please see the price list.
The first 7 digits can vary for special models. Please enquire with us regarding the designation for special models.

Transfer number to order fax sheet on page 242.

- The special flat-design strike (16.5 mm)
- Standard with FAFIX (FF)
- There is a range of narrow striking plates available
- Can be mounted DIN right or left by turning over 180°
- If DR is specified in the order, the mirror-inverted version (19A) is supplied

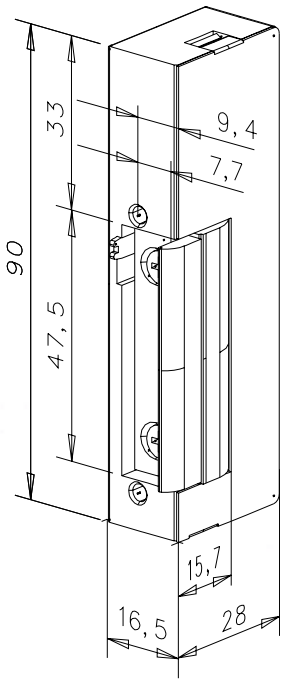

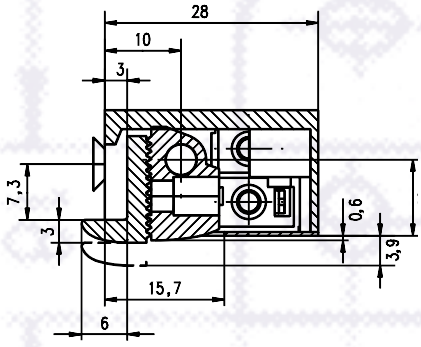

Sectional drawing 1:1

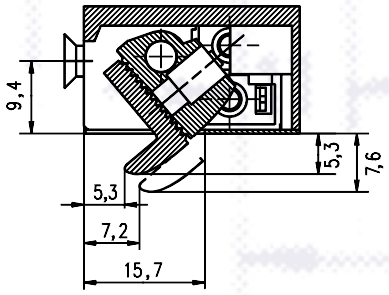

Striking plates: Page 123, 167, 171 ➔➔

Specifications	
Break-in resistance Standard	3000 N
Material: Housing/keep/surface-m. attachment Fafix	Die-cast zinc/die-cast zinc/brass
Operating temperature range	-15 °C to +40 °C
Mounting independent of position	Yes

Electrical data At 20 °C		Operating voltage Tolerance range	Rated resistance in Ohm	AC-Current consumption in mA	DC-Current consumption in mA (50% Residual ripple)	DC-Current consumption in mA (stabilized)	Operating noise during AC operation*	Operating noise during DC operation* (50% Residual ripple)	Keep pre-load max. in N with AC	Keep pre-load max. in N with DC (50% Residual ripple)	Keep pre-load max. in N with DC (stabilized)
6-12 (6-V operation)	D1	as specified	7,7	550	740	780	5	1	150	20	10
6-12 (12-V operation)	D1	as specified	7,7	1100	1480	1560	4	1	120	50	30
12 V Intercom	E5	±1,8 V	30,0	290	385	400	3	0	90	40	20
12 V eE	E3	±1 V	60,0	130	190	200	4	0	80	20	10
24 V eE	F3	±2 V	235,0	70	100	105	4	0	80	20	10

*For operating noise, see diagram page 235. Explanation of technical data page 234.

Order data, model series 19, 29 — **Order number** = blue area

Model		Design		Striking plate		Colour		Voltage		DIN orientation	
Digits 1 - 7				Digits 8 - 10		Digits 11 + 12		Digits 13 + 14		Digit 15	
19	19	E	E	HZ	434	EST	35	6-12 V	D1	DL	4
29	29	FAFIX = standard		iW	421	galvanized	40	12 V Intercom	E5	DR	5
1905	1905			iW	042	grey	02	12 V eE	E3		
19A	19A					gold	01	24 V eE	F3		
29A	29A			Possible combinations are indicated in the striking plate tables.		For possible colours, see page 236.				For indication of the DIN orientation, please note the striking plate table and the selected striking plate.	
1905A	1905A										

→ Transfer number to order fax sheet on page 242.

*For possible combinations, please see the price list.
The first 7 digits can vary for special models. Please enquire with us regarding the designation for special models. .

- The universal strike with radius keep
- The keep moves into the strike housing during the opening process. This means that the customary frame recess in the keep hinging area can be dispensed with.
- Suitable for all commonly used striking plates
- Can be mounted DIN right or left by turning over 180°
- Symmetrical design

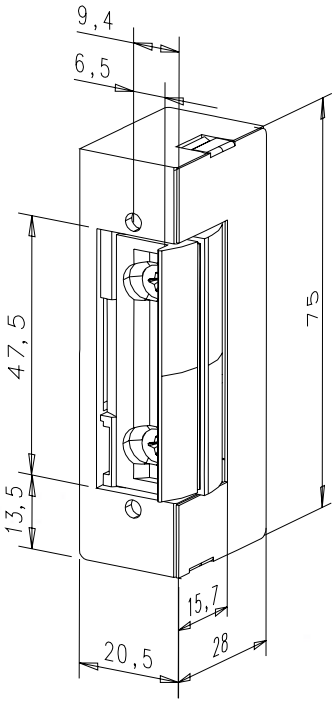

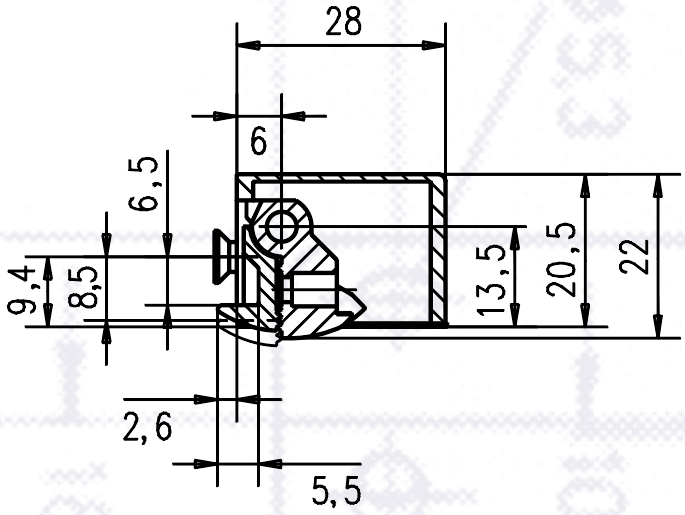

Sectional drawing 1:1

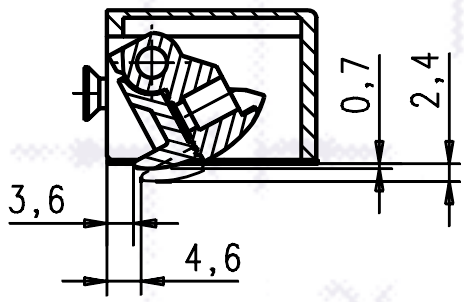

Striking plates: Page 123 ➔➔

Specifications	
Break-in resistance Standard	5000 N
Material: Housing/keep/surface-m. attachment Fafix	Die-cast zinc/die-cast zinc/brass
Operating temperature range	-15 °C to +40 °C
Mounting independent of position	Yes

Electrical data At 20 °C		Operating voltage Tolerance range	Rated resistance in Ohm	AC-Current consumption in mA	DC-Current consumption in mA (50% Residual ripple)	DC-Current consumption in mA (stabilized)	Operating noise during AC operation*	Operating noise during DC operation* (50% Residual ripple)	Keep pre-load max. in N with AC	Keep pre-load max. in N with DC (50% Residual ripple)	Keep pre-load max. in N with DC (stabilized)
6-12 V (6-V operation)	D1	as specified	9,1	550	630	665	5	1	160	140	10
6-12 V (12-V operation)	D1	as specified	9,1	1050	1150	1330	5	2	160	150	90
8-16 V (8-V operation) replaces 12 V Intercom	R1	as specified	22,0	310	360	380	5	1	10	150	10
8-16 V (12-V operation) replaces 12 V Intercom	R1	as specified	22,0	440	550	570	4	1	160	150	50
8-16 V (16-V operation) replaces12 V Intercom	R1	as specified	22,0	630	695	760	4	1	160	150	100
12 V 100% ED	E4	±1 V	44,0		265	280		0		70	30
24 V 100% ED	F4	±2 V	200,0		115	120		1		45	10
12 V fail-unlocked 3-type	E9	±1 V	51,0		220	235		0		10	10
24 V fail-unlocked 3-type	F9	±2 V	160,0		140	150		0		10	10

*For operating noise, see diagram page 235. Explanation of technical data page 234.

Order data, model series 116, 126, 136

Order number = blue area

Model		Design		Striking plate		Colour		Voltage		DIN orientation	
Digits 1 - 7				Digits 8 - 10		Digits 11 + 12		Digits 13 + 14		Digit 15	
116	116	E	E	HZ	021	EST	35	6-12 V	D1	UNI	1
126	126	FAFIX = Standard		HZ	391	galvanized	40	8-16 V	R1	DL	4
136	136			iW	277	grey	02	12 V Intercom	E5	DR	5
11605	11605			kL	106	gold	01	12 V 100% ED	E4		
13605	13605							24 V 100% ED	F4		
		E and fail unlocked (136) cannot be combined.		Possible combinations are indicated in the striking plate tables.		For possible colours, see page 236.		Fail unlocked 12 V (136)	E9	For indication of the DIN orientation, please note the striking plate table and the selected striking plate.	
								Fail unlocked 24 V (136)	F9		
								R1 will replace E5.			

*For possible combinations, please see the price list.
The first 7 digits can vary for special models. Please enquire with us regarding the designation for special models. .

Transfer number to order fax sheet on page 242.

- The universal strike with radius keep
- The keep moves into the strike housing during the opening process. This means that the customary frame recess in the keep hinging area can be dispensed with.
- Suitable for all commonly used striking plates
- Can be mounted DIN right or left by turning over 180°
- Symmetrical design
- Housing shape symmetrical with mounted monitoring contact
- DIN right mounting with monitoring contact below

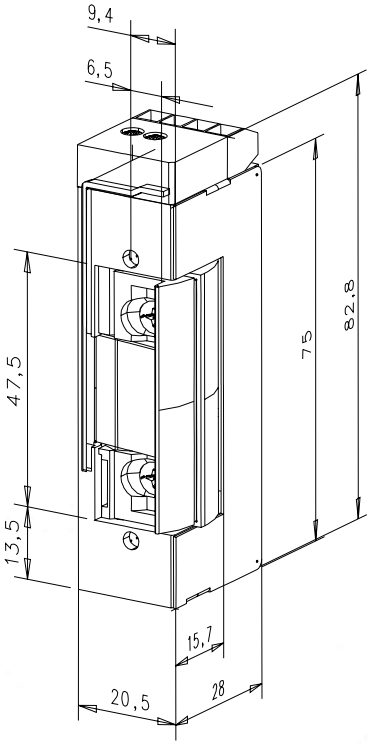

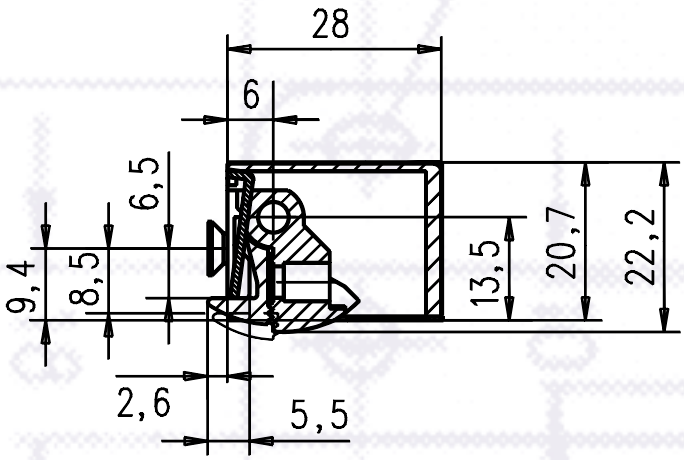

Sectional drawing 1:1

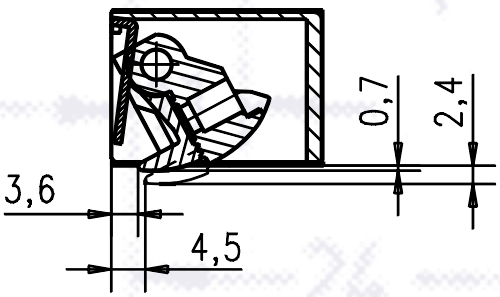

Striking plates: Page 123 ➔➔

Specifications	
Break-in resistance Standard	5000 N
Material: Housing/keep/surface-m. attachment Fafix	Die-cast zinc/die-cast zinc/die-cast zinc
Operating temperature range	-15 °C to +40 °C
Mounting independent of position	Yes

Electrical data At 20 °C		Operating voltage Tolerance range	Rated resistance in Ohm	AC-Current consumption in mA	DC-Current consumption in mA (50% Residual ripple)	DC-Current consumption in mA (stabilized)	Operating noise during AC operation*	Operating noise during DC operation* (50% Residual ripple)	Keep pre-load max. in N with AC	Keep pre-load max. in N with DC (50% Residual ripple)	Keep pre-load max. in N with DC (stabilized)
6-12 V (6-V operation)	D1	as specified	9,1	550	630	665	5	1	160	140	10
6-12 V (12-V operation)	D1	as specified	9,1	1050	1150	1330	5	2	160	150	90
8-16 V (8-V operation) replaces 12 V Intercom	R1	as specified	22,0	310	360	380	5	1	10	150	10
8-16 V (12-V operation) replaces 12 V Intercom	R1	as specified	22,0	440	550	570	4	1	160	150	50
8-16 V (16-V operation) replaces 12 V Intercom	R1	as specified	22,0	630	695	760	4	1	160	150	100
12 V 100% ED	E4	±1 V	44,0		265	280		0		70	30
24 V 100% ED	F4	±2 V	200,0		115	120		1		45	10
12 V fail-unlocked 3-type	E9	±1 V	51,0		220	235		0		10	10
24 V fail-unlocked 3-type	F9	±2 V	160,0		140	150		0		10	10

*For operating noise, see diagram page 235. Explanation of technical data page 234.

Order data, model series 116RR, 136RR — **Order number** = blue area

Model		Design		Striking plate		Colour		Voltage		DIN orientation	
Digits 1 - 7				Digits 8 - 10		Digits 11 + 12		Digits 13 + 14		Digit 15	
116RR	116RR	E	E	HZ	021	EST	35	6-12 V	D1	UNI	I
136RR	136RR	FAFIX = Standard		HZ	391	galvanized	40	8-16 V	R1	DL	4
11605RR	11605RR			iW	277	grey	02	12 V Intercom	E5	DR	5
13605RR	13605RR			kL	106	gold	01	12 V 100% ED	E4		
		E and fail unlocked cannot be combined.		Possible combinations are indicated in the striking plate tables.		For possible colours, see page 236.		24 V 100% ED	F4	For indication of the DIN orientation, please note the striking plate table and the selected striking plate.	
								Fail unlocked 12 V (136)	E9		
								Fail unlocked 24 V (136)	F9		
								R1 will replace E5.			

*For possible combinations, please see the price list.
The first 7 digits can vary for special models. Please enquire with us regarding the designation for special models. .

Transfer number to order fax sheet on page 242.

- The universal strike with radius keep
- Suitable for all commonly used striking plates
- Can be mounted DIN right or left by turning over 180°
- Narrow design
- If DR is specified in the order, the mirror-inverted version (19A) is supplied

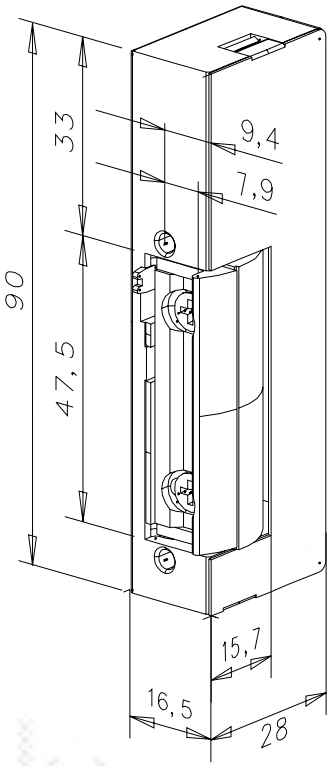

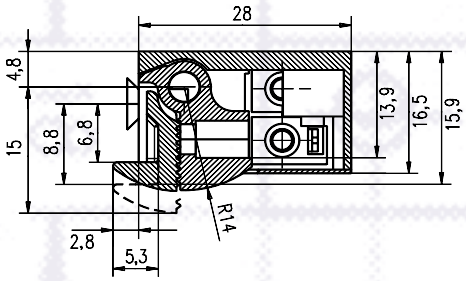

Sectional drawing 1:1

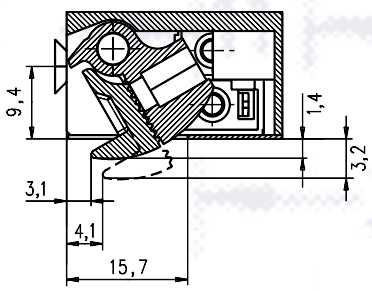

Striking plates: Page 123 ➔➔

Specifications	
Break-in resistance Standard	3000 N
Material: Housing/keep/surface-m. attachment Fafix	Die-cast zinc/die-cast zinc/Catamold
Operating temperature range	-15 °C to +40 °C
Mounting independent of position	Yes

Electrical data At 20 °C		Operating voltage Tolerance range	Rated resistance in Ohm	AC-Current consumption in mA	DC-Current consumption in mA (50% Residual ripple)	DC-Current consumption in mA (stabilized)	Operating noise during AC operation*	Operating noise during DC operation* (50% Residual ripple)	Keep pre-load max. in N with AC	Keep pre-load max. in N with DC (50% Residual ripple)	Keep pre-load max. in N with DC (stabilized)
6-12 (6-V operation)	D1	as specified	7,7	550	740	780	4	1	160	40	10
6-12 (12 -V operation)	D1	as specified	7,7	1100	1480	1560	4	1	160	80	50
12 V eE	E3	±1 V	60,0	130	190	200	4	0	50	10	10
24 V eE	F3	±2 V	235,0	70	100	105	4	0	50	10	10

*For operating noise, see diagram page 235. Explanation of technical data page 234.

Order data, model series 119, 129								**Order number** = blue area			
Model		**Design**		**Striking plate**		**Colour**		**Voltage**		**DIN orientation**	
Digits 1 - 7				Digits 8 - 10		Digits 11 + 12		Digits 13 + 14		Digit 15	
119	119	E	E	HZ	434	EST	35	6-12 V	D1	UNI	I
129	129			iW	421	galvanized	40	12 V Intercom	E5	DL	4
119A	119A			kL	096	grey	02	12 V eE	E3	DR	5
129A	129A					gold	01	24 V eE	F3		
				Possible combinations are indicated in the striking plate tables.		For possible colours, see page 236.				For indication of the DIN orientation, please note the striking plate table and the selected striking plate.	

*For possible combinations, please see the price list.
The first 7 digits can vary for special models. Please enquire with us regarding the designation for special models. .

Transfer number to order fax sheet on page 242.

- Water resistant for external use (wd)
- Adjustable (FIX)
- Mechanical unlocking with adjusting screw

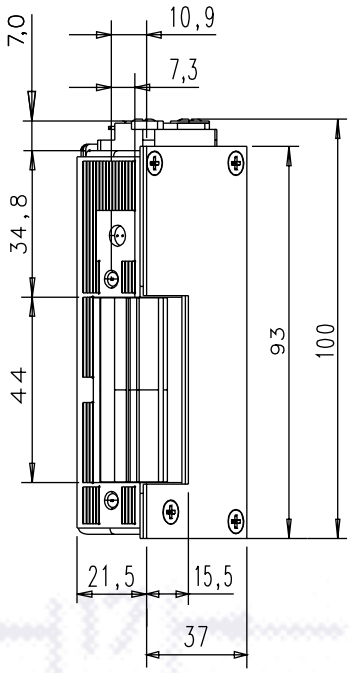

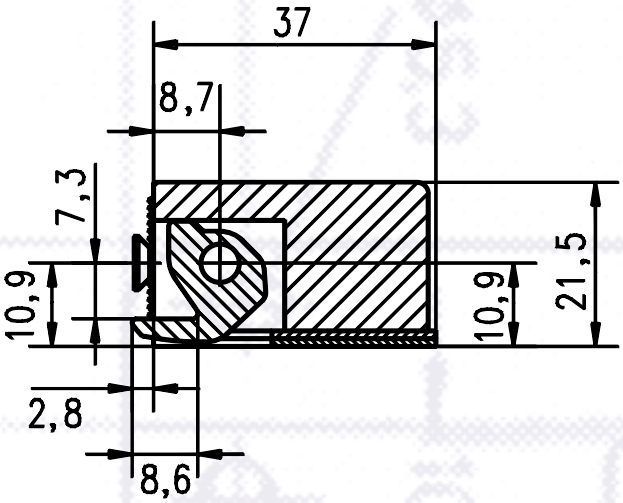

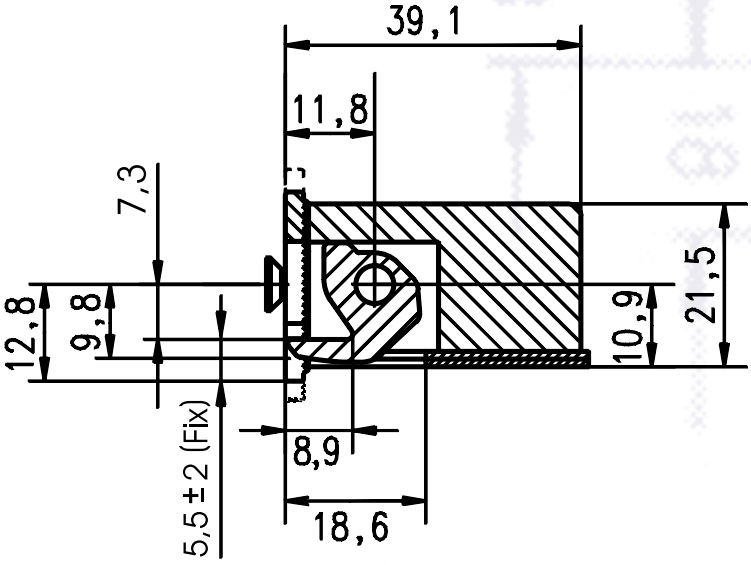

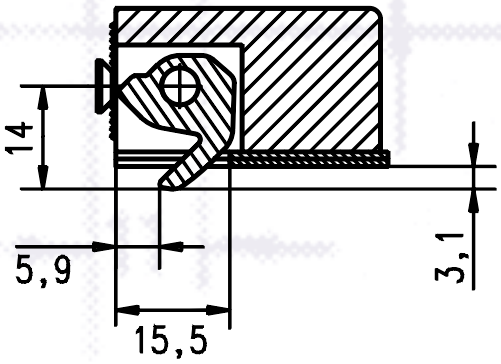

Sectional drawing 1:1

Striking plates: Page 175, 179, 191 ➔➔

Specifications	
Standard break-in resistance	3000 N
Material: Housing	Die-cast zinc
Material: Keep	Brass
Operating temperature range	-20 °C to +40 °C
Mounting independent of position	Yes

Electrical data At 20 °C Model series: 12wd, 22wd, 32wd Coil type		Operating voltage Tolerance range	Rated resistance in Ohm	AC current consumption in mA	DC current consumption in mA (50% residual ripple)	DC current consumption in mA (stabilized)	Operating noise during AC operation*	Operating noise during DC operation* (50% residual ripple)	Keep pre-load max. in N with AC	Keep pre-load max. in N with DC (50% residual ripple)	Keep pre-load max. in N with DC (stabilized)
6-12 V (6-V operation)	D1	as specified	7,7	550	740	780	4	0	40	30	20
6-12 V (12-V operation)	D1	as specified	7,7	1100	1480	1560	4	0	150	50	30
8-16 V (8-V operation)	R1	as specified	16,5	350	470	485	4	1	50	10	10
8-16 V (12-V operation)	R1	as specified	16,5	500	710	725	4	0	90	20	10
8-16 V (16-V operation)	R1	as specified	16,5	700	940	970	4	1	80	20	10
12 V Intercom	E5	±1,8 V	30,0	300	390	400	4	0	50	20	10
12 V eE	E3	±1 V	60,0	130	190	200	3	0	80	30	20
24 V eE	F3	±2 V	235,0	70	100	105	4	1	50	30	20
12 V fail-unlocked 3-type	E9	±1 V	61,0		180	195	4	0			
24 V fail-unlocked 3-type	F9	±2 V	200,0		115	120	4	0			

*For operating noise, see diagram page 235. Explanation of technical data page 234.

Order data, model series 14, 24, 34 — **Order number** = blue area

Model		Mechanical unlocking		Design		Striking plate			Colour		Voltage		DIN orientation	
Digits 1 - 7						Digits 8 - 10			Digits 11 + 12		Digits 13 + 14		Digit 15	
12	12F	E	E	RR	RR		without E	with E	EST	35	6-12 V	D1	DL mounted	4
22	22F					HZ	051	050	galvanized	40	8-16 V	R1	DR mounted	5
32	32F					iW	062	063	grey	02	12 V Intercom	E5		
1205	1205F					kL	152	150			12 V eE	E3		
3205	3205F										24 V eE	F3		
		E and fail unlocked cannot be combined.				Possible combinations are indicated in the striking plate tables. Fix adjustment not possible with angle striking plates.			For possible colours, see page 236.		Fail unlocked 12 V (32)	E9	For indication of the DIN orientation, please note the striking plate table and the selected striking plate.	
											Fail unlocked 24 V (32)	F9		
											Only specify 12 or 24 C fail unlocked with model 32.			

Transfer number to order fax sheet on page 242.

- Water resistant for external use (wd)
- Adjustable (FIX)
- Mechanical unlocking with adjusting screw

The companies AMF and Böko supply matching locks especially for use for garden gates. In addition, lock countercases are available which are prepared specifically for effeff strikes. The design of the lock countercases calls for minimal dimensions of the 12wd model series. Primarily suited for this application is model series 12FKAB (12EFKAB). The overall length is reduced by using connecting cable instead of terminals.

As these strikes are mounted with the long housing section point downwards in the lock case, in DIN left-mounted doors (DL) a strike with the order specification DIN right (DR = 5) must be used. Analogously, in DIN right-mounted doors (DR), a strike with the order specification DIN left (DL = 4) must be used.

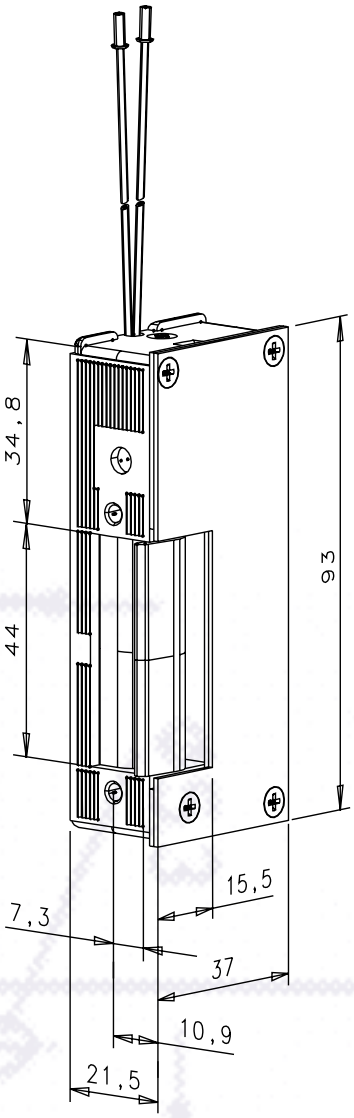

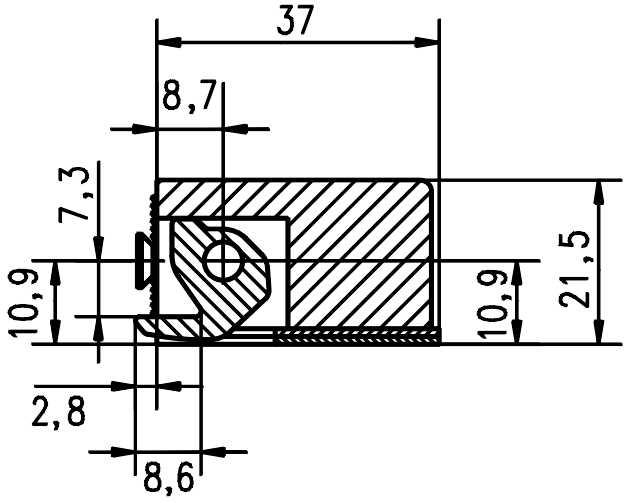

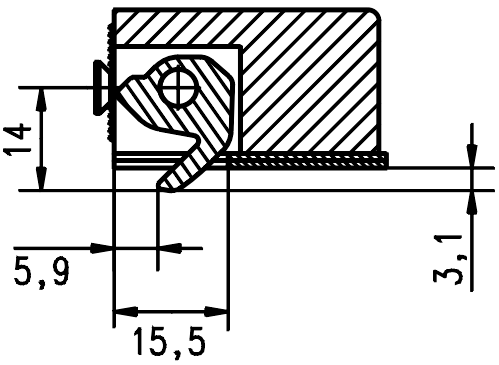

Sectional drawing 1:1

Specifications	
Standard break-in resistance	3000 N
Material: Housing	Die-cast zinc
Material: Keep	Brass
Operating temperature range	-20 °C to +40 °C
Mounting independent of position	Yes

Electrical data At 20 °C Model series: 12FKAB, 22FKAB, 32FKAB Coil type		Operating voltage Tolerance range	Rated resistance in Ohm	AC current consumption in mA	DC current consumption in mA (50% residual ripple)	DC current consumption in mA (stabilized)	Operating noise during AC operation*	Operating noise during DC operation* (50% residual ripple)	Keep pre-load max. in N with AC	Keep pre-load max. in N with DC (50% residual ripple)	Keep pre-load max. in N with DC (stabilized)
6-12 V GS/WS (6-V operation)	D1	as specified	7,7	550	740	780	4	0	40	30	20
6-12 V GS/WS (12-V operation)	D1	as specified	7,7	1100	1480	1560	4	0	150	50	30
8-16 V GS/WS (8-V operation)	R1	as specified	16,5	350	470	485	4	1	50	10	10
8-16 V GS/WS (12-V operation)	R1	as specified	16,5	500	710	725	4	0	90	20	10
8-16 V GS/WS (16-V operation)	R1	as specified	16,5	700	940	970	4	1	80	20	10
12 V Intercom	E5	±1,8 V	30,0	300	390	400	4	0	50	20	10
12 V eE	E3	±1 V	60,0	130	190	200	3	0	80	30	20
24 V eE	F3	±2 V	235,0	70	100	105	4	1	50	30	20
12 V fail-unlocked 3-type	E9	±1 V	61,0		180	195	4	0			
24 V fail-unlocked 3-type	F9	±2 V	200,0		115	120	4	0			

*For operating noise, see diagram page 235. Explanation of technical data page 234.

Order data, model series 12wd, 22wd, 32wd					Order number = blue area			
Model	**Mechanical unlocking**	**Design**	**Striking plate**	**Colour**	**Voltage**		**DIN orientation**	
Digits 1 - 7			Digits 8 - 10	Digits 11 + 12	Digits 13 + 14		Digit 15	
			– – –	– –				
12FKAB					6-12 V	D1	DL	4
22FKAB					8-16 V	R1	DR	5
32FKAB					12 V Intercom	E5		
12EFKAB					12 V eE	E3		
22EFKAB					24 V eE	F3		
					Fail unlocked 12 V (34)	E9		
					Fail unlocked 24 V (34)	F9		
					Only specify 12 or 24 C fail unlocked with model 32.			

Transfer number to order fax sheet on page 242.

- Surface-mounted housing as mating component for rim-type strikes
- Water resistant for external use (wd)
- Mechanical unlocking with adjusting screw
- Monitoring contact possible

With rim-type strikes, the dead bolt can be arranged above the latch bolt. For this reason, the surface-mounted housing must be mounted to fit. Please note in this context the dimensional drawing when selecting version A or B.

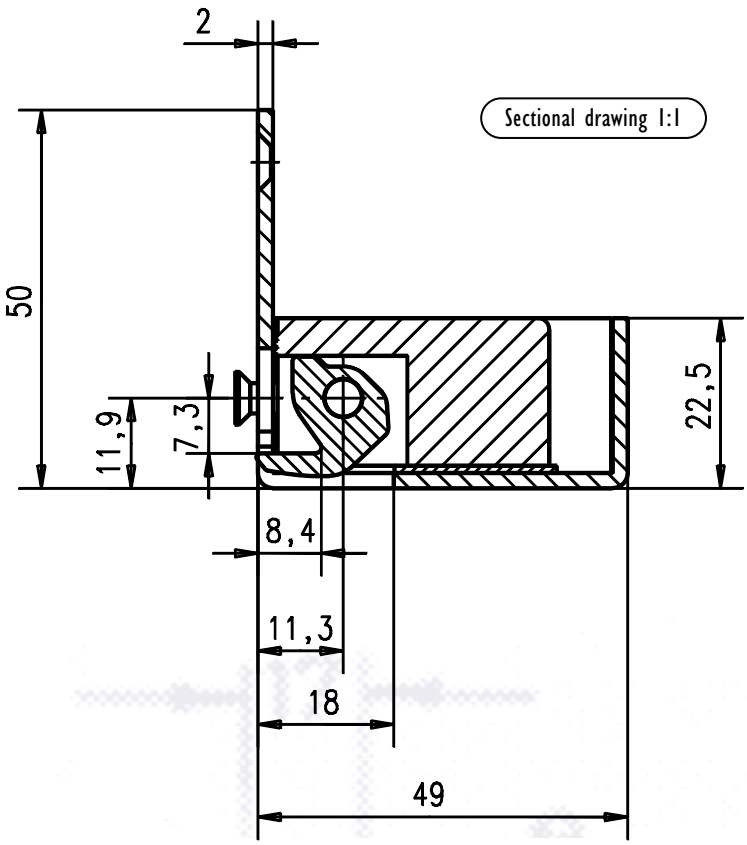

Sectional drawing 1:1

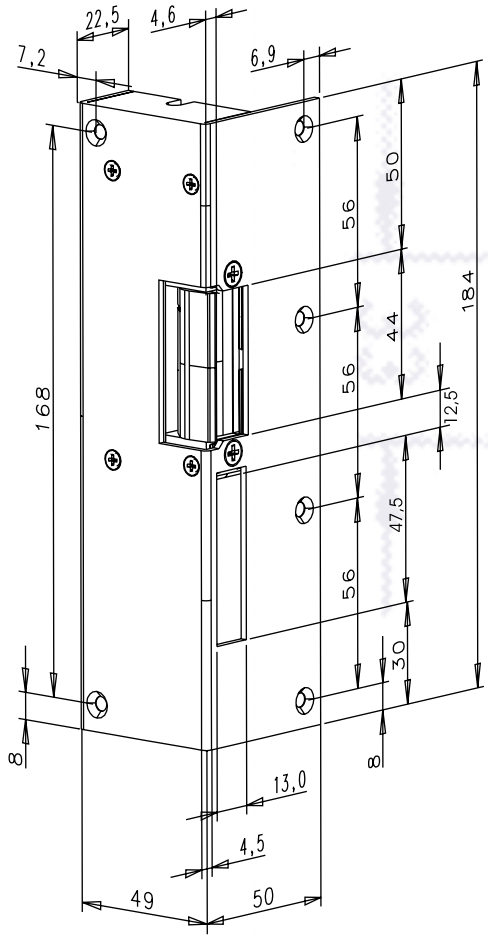

Version A

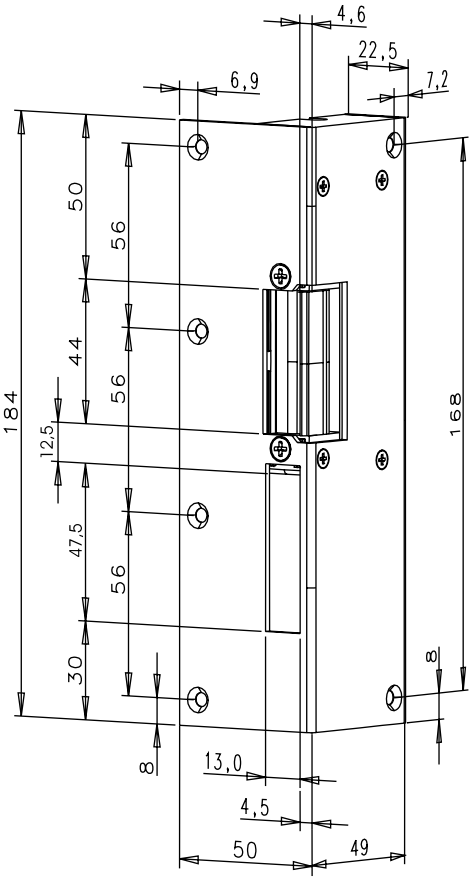

Version B

Specifications	
Standard break-in resistance	3000 N
Material: Housing	Die-cast zinc
Material: Keep	Brass
Operating temperature range	-20 °C to +40 °C
Mounting independent of position	Yes

Electrical data At 20 °C Model series: 12iS, 22iS, 32iS Coil type		Operating voltage Tolerance range	Rated resistance in Ohm	AC current consumption in mA	DC current consumption in mA (50% residual ripple)	DC current consumption in mA (stabilized)	Operating noise during AC operation*	Operating noise during DC operation* (50% residual ripple)	Keep pre-load max. in N with AC	Keep pre-load max. in N with DC (50% residual ripple)	Keep pre-load max. in N with DC (stabilized)
6-12 V (6-V operation)	D1	as specified	7,7	550	740	780	4	0	40	30	20
6-12 V (12-V operation)	D1	as specified	7,7	1100	1480	1560	4	0	150	50	30
8-16 V (8-V operation)	D1	as specified	16,5	350	470	485	4	1	50	10	10
8-16 V (12-V operation)	R1	as specified	16,5	500	710	725	4	0	90	20	10
8-16 V (16-V operation)	R1	as specified	16,5	700	940	970	4	1	80	20	10
12 V Intercom	E5	±1,8 V	30,0	300	390	400	4	0	50	20	10
12 V eE	E3	±1 V	60,0	130	190	200	3	0	80	30	20
24 V eE	F3	±2 V	235,0	70	100	105	4	1	50	30	20
12 V fail-unlocked 3-type	E9	±1 V	61,0		180	195	4	0			
24 V fail-unlocked 3-type	F9	±2 V	200,0		115	120	4	0			

*For operating noise, see diagram page 235. Explanation of technical data page 234.

Order data, model series 12IS, 22IS, 32IS					Order number = blue area			
Model	**Mechanical unlocking**	**Design**	**Striking plate**	**Colour**	**Voltage**		**DIN orientation**	
Digits 1 - 7			Digits 8 - 10	Digits 11 + 12	Digits 13 + 14		Digit 15	
12IS			203 = Version A				Version A	6
22IS			202 = Version B				Version B	7
32IS				02	6-12 V	D1		
12RRIS					12 V Intercom	E5		
22RRIS					12 V eE	E3		
32RRIS					24 V eE	F3		
					Fail unlocked 12 V (32)	E9		
					Fail unlocked 24 V (32)	F9		
12EIS = with mechanical unlocking			207 = Version A				Version A	6
22EIS = with mechanical unlocking			206 = Version B				Version B	7

Transfer number to order fax sheet on page 242.

- Surface-mounted housing for rim-type locks
- Compact design for narrow dead bolt

With rim-type strikes, the dead bolt can be arranged above the latch bolt. For this reason, the surface-mounted housing must be mounted to fit. Please note in this context the dimensional drawing when selecting version A or B.

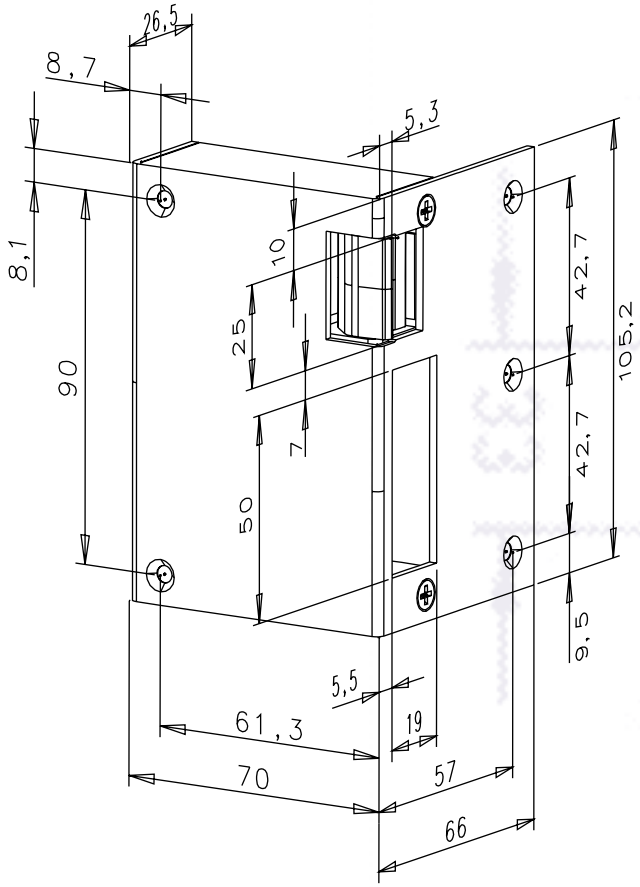

Version A

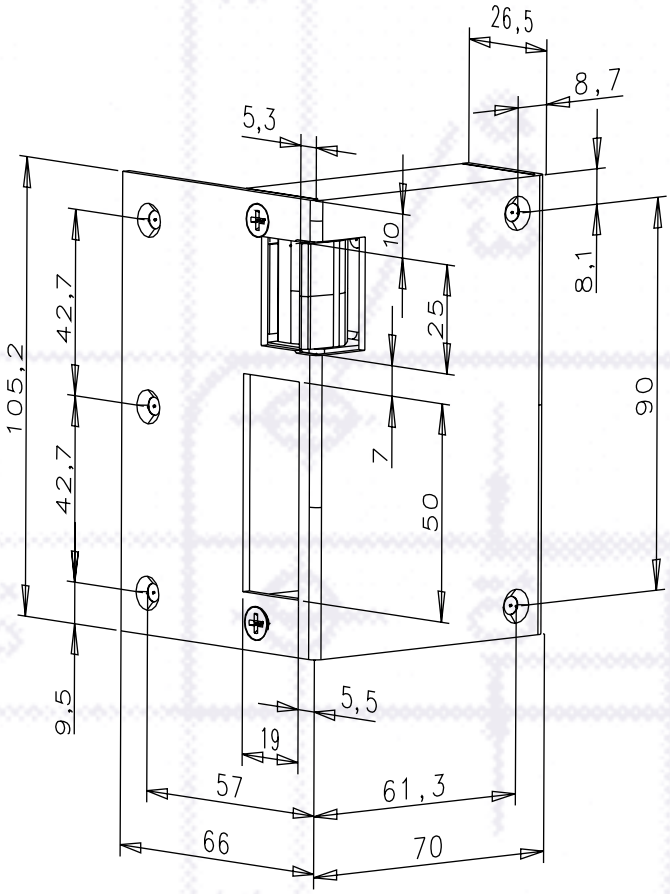

Version B

Specifications	
Standard break-in resistance	3000 N
Material: Housing	G-ALSi9CU3
Material: Keep	Brass
Operating temperature range	-20 °C to +40 °C
Mounting independent of position	Yes

Electrical data At 20 °C Model series: 12K Coil type		Operating voltage Tolerance range	Rated resistance in Ohm	AC current consumption in mA	DC current consumption in mA (50% residual ripple)	DC current consumption in mA (stabilized)	Operating noise during AC operation*	Operating noise during DC operation* (50% residual ripple)
6-12 V (6-V operation)	D1	as specified	7,4	670	780	810	4	0
6-12 V (12-V operation)	D1	as specified	7,4	1250	1500	1620	4	0
8-16 V (8-V operation)	R1	as specified	16,6	400	470	480	4	0
8-16 V (12-V operation)	R1	as specified	16,6	590	685	725	4	0
8-16 V (16-V operation)	R1	as specified	16,6	720	940	965	4	0
12 V eE	E3	±1 V	60,0	130	190	200	3	0
24 V eE	F3	±2 V	230,0	70	100	105	3	0

*For operating noise, see diagram page 235. Explanation of technical data page 234.

Order data, model series 12K								Order number = blue area			
Model		Design		Housing for A or B	Colour			Voltage		Version A/B	
Digits 1 - 7				Digits 8 - 10	Digits 11 + 12			Digits 13 + 14		Digit 15	
12K	12K		A	204	grey	02		6-12 V	D1		6
			B	205				8-16 V	R1		7
								12 V eE	E3		
								24 V eE	F3		

Transfer number to order fax sheet on page 242.

- Suitable for twin bolt locks and doors without fire protection requirements
- With integrated electrical disconnection when locked
- Mounting in fire protection doors invalidates the approval of the fire protection element

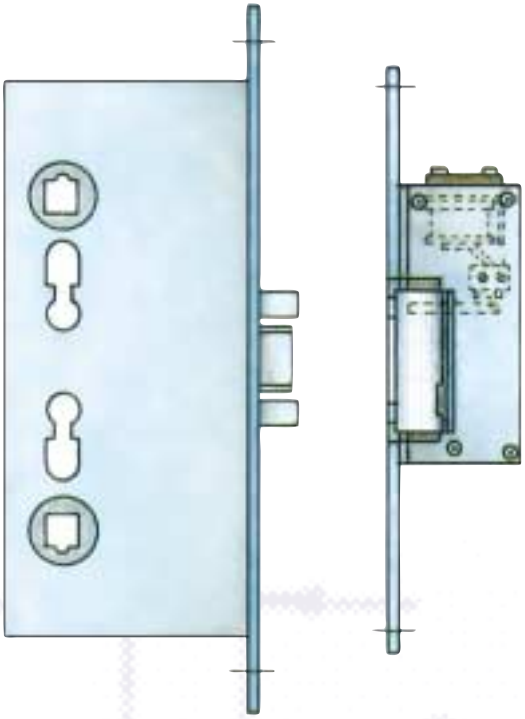

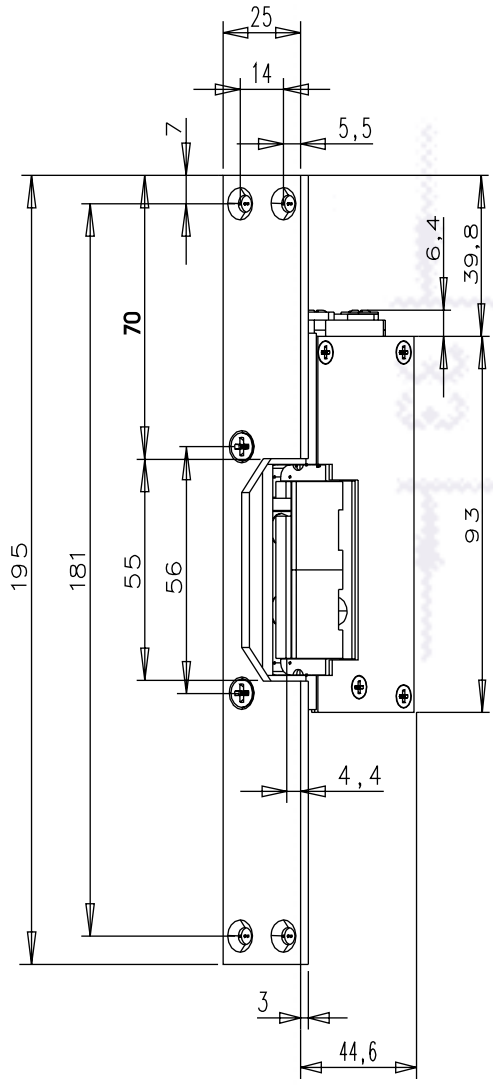

Specifications	
Standard break-in resistance	3000 N
Material: Housing	Die-cast zinc
Material: Keep	Brass
Operating temperature range	-20 °C to +40 °C
Mounting independent of position	Yes

Electrical data At 20 °C Model series: 12/130 Coil type		Operating voltage Tolerance range	Rated resistance in Ohm	AC current consumption in mA	DC current consumption in mA (50% residual ripple)	DC current consumption in mA (stabilized)	Operating noise during AC operation*	Operating noise during DC operation* (50% residual ripple)	Keep pre-load max. in N with AC	Keep pre-load max. in N with DC (50% residual ripple)	Keep pre-load max. in N with DC (stabilized)
6-12 V GS/WS (6-V operation)	D1	as specified	7,7	550	740	780	4	0	40	30	20
6-12 V GS/WS (12-V operation)	D1	as specified	7,7	1100	1480	1560	4	0	150	50	30
8-16 V GS/WS (8-V operation)	R1	as specified	16,5	350	470	485	4	1	50	10	10
8-16 V GS/WS (12-V operation)	R1	as specified	16,5	500	710	725	4	0	90	20	10
8-16 V GS/WS (16-V operation)	R1	as specified	16,5	700	940	970	4	1	80	20	10
12 V Intercom	E5	±1,8 V	30,0	300	390	400	4	0	50	20	10
12 V eE	E3	±1 V	60,0	130	190	200	3	0	80	30	20
24 V eE	F3	±2 V	235,0	70	100	105	4	1	50	30	20
12 V fail-unlocked 3-type	E9	±1 V	61,0		180	195	4	0			
24 V fail-unlocked 3-type	F9	±2 V	200,0		115	120	4	0			

*For operating noise, see diagram page 235. Explanation of technical data page 234.

Order data, model series 12/130 — **Order number** = blue area

Model		Design	Striking plate		Colour		Voltage		Version A/B	
Digits 1 - 7			Digits 8 - 10		Digits 11 + 12		Digits 13 + 14		Digit 15	
12/130	12/130		without E	091	galvanized	40	8-16 V	R1	universal	I
12/130E	12/140		with E	092			6-12 V	D1		
							12 V Intercom	E5		
							12 V eE	E3		
							24 V eE	F3		

Transfer number to order fax sheet on page 242.

MASONRY BOX FOR MODEL SERIES 12WD, 22WD,32WD TO FIT HZ STRIKING PLATE 050 OR 051

- For universal DIN-left or DIN-right grouting in

Masonry box galvanized and painted grey

1060---------00

Galvanized stop

1060.1010000140

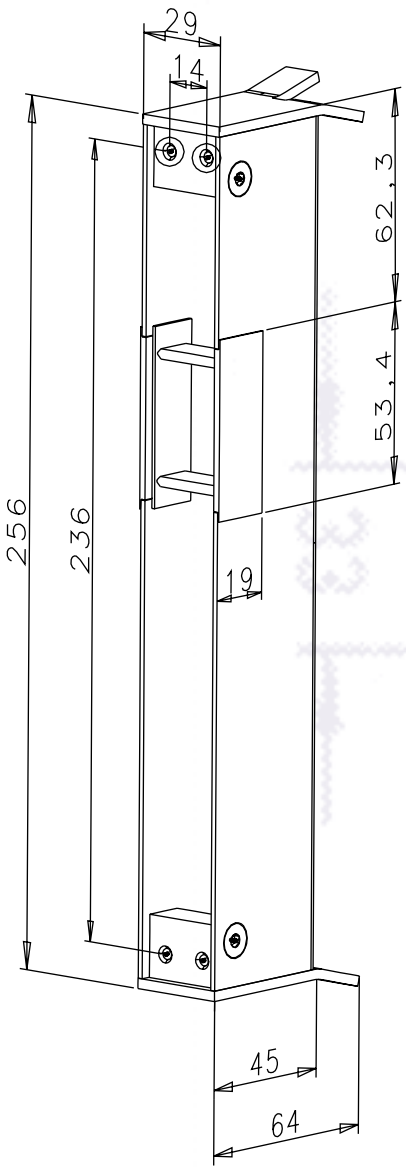

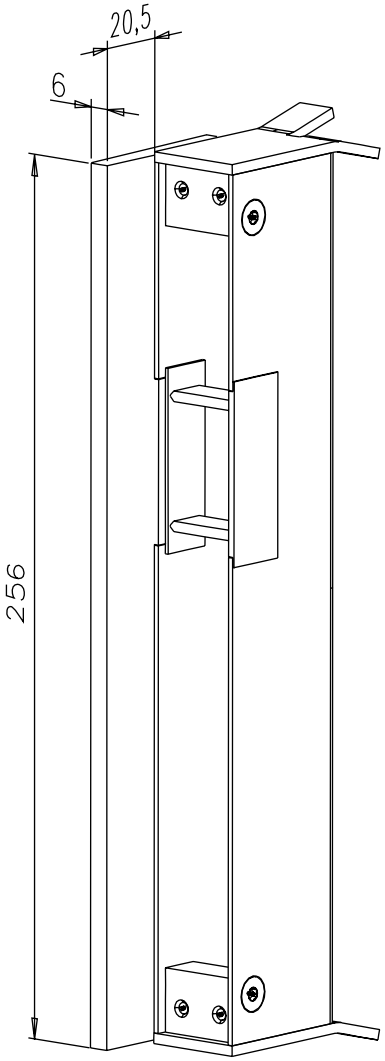

Striking plates: Page 175 ➔➔

This represents the ideal solution to guarantee striker function in bad weather and sub-zero temperatures. For constructions without direct protection against rain and snow, the heating foil reliably prevents the keep from freezing solid.

Electrical connection:

The heating element is supplied for 12 V and 24 V operating voltage. The power consumption in either case is 2,5 W. The heating foil is connected directly to the solder points on the foil. It must be continuously under current. To save energy, effeff recommends integrating an off switch for summer-time operation. Please note that the rated operating voltages of all components must always agree.

760-13-------00

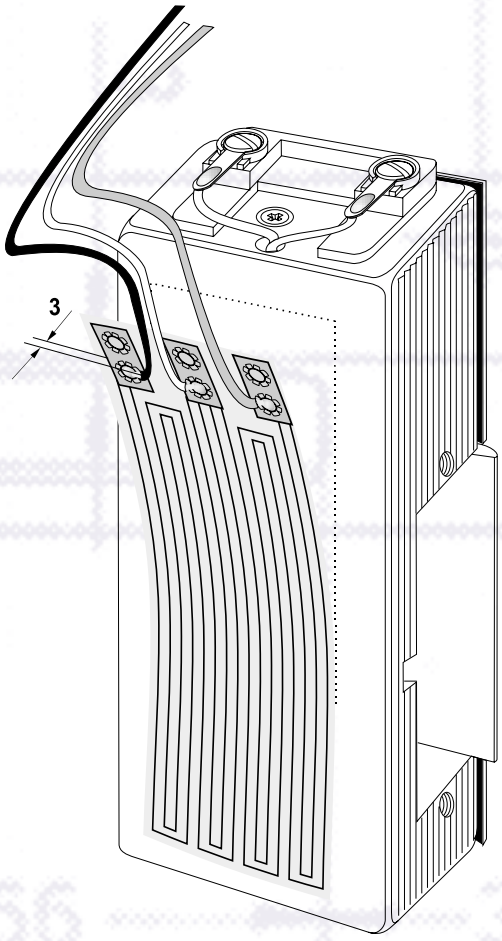

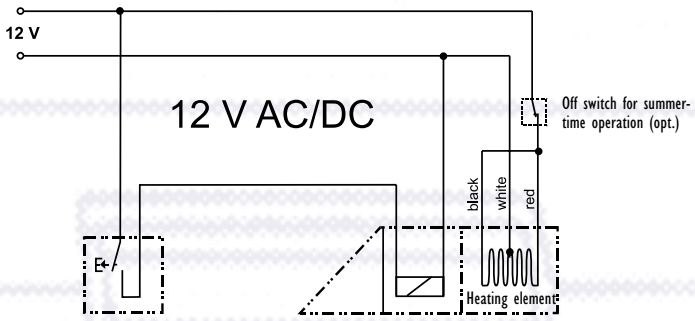

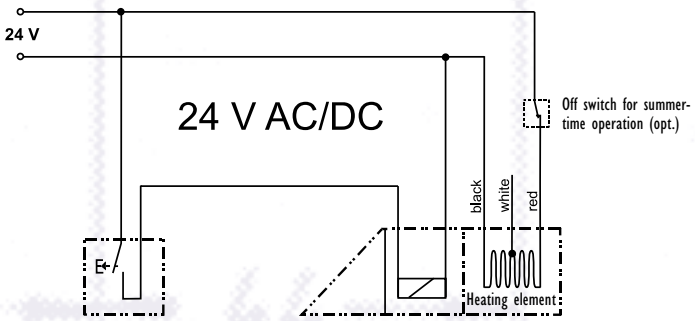

High-security strikes for fire doors.

All effeff strikes for fire barriers and fire doors are in compliance with European Directives on products used in the building industry. This is certified by a General test certificate from the Materials Testing Agency of North Rhine Westphalia (MPA NRW Test Certificate no. P-12 0389 0 96). These strikes bear the "Ü" mark and the code "D022.0" in accordance with legislation governing the use of marks of conformity in the German states. The production of electric strikes is monitored by the Materials Testing Agency of North Rhine Westphalia (reg. no. 129899-D022.0), so creating a reference to the General Test Certificate of the Building Supervisory Authorities.

The notices of the German Institute of Building Technology in Berlin, Issue 1/1996 (see page 69) clearly indicate that retrofitting of electric strikes on existing fire protection doors is not admissible. Modifications and additions to fire barriers (point 2.2) may only be made during the manufacturing process. The installation of suitable electrical strikes working according to the fail-locked principle is described under point 2.2.4. Installation may only be performed in the correct location, i.e. DIN left-hand strikes for DIN left-opening doors, DIN right-hand strikes for DIN right-opening doors. Horizontal positioning is possible with special models (e.g. 1422). Before a fire protection door is equipped with an electric strike, we recommend documenting legal admissibility by a manufacturer's confirmation and a General Test Certificate from the Building Supervisory Authorities.

Extract from the Notices of the German Institute of Building Technology, Berlin

Issue 1/1996 dated February 01, 1996, German Institute of Building Technology - an Institute under public law -

Modifications to fire-resistant doors and fire barriers (Draft June 1995)

1. General

Non-standardized fire doors constitute building products not subject to regulation whose serviceability requires verification (Art. 20 3 MBO 12.93). Verification is predominantly furnished in the form of a General Permit issued by a building inspectorate (Art. 21 section 1 MBO).

Notice will be given in such permits to the effect that proof of serviceability also extends to the modifications to fire doors listed below. The modifications are permissible for revolving doors. No reservations exist as to their equivalent use on sliding, lifting or roller doors. Reference will be made in the permits to the publication of this information in the "notices" of the German Institute of Building Technology. In consequence, no further evidence of serviceability is required in respect of the modifications.

2. Admissible modifications

2.1 Admissible modifications and additions which may be carried out on fire doors already manufactured:

2.1.1 Installation of contacts, .e.g. reed contacts and striking face contacts (deadbolt contacts) for monitoring closure, in so far as these can be surface mounted or mounted in existing apertures (see also 2.2.2).

2.1.2 Replacement of the lock by a suitable self-locking or motorized lock with latch bolt, in so far as this lock can be installed in the existing lock aperture and no changes are needed to the striking plate.

2.1.3 Cable ducting on the door.

2.1.4 Installation of peephole systems.

2.1.5 The use of screws, rivets or adhesives to attach notices to the door.

2.1.6 Installation of screws or adhesives to attach metal strips (up to approx. 250 mm wide or high), e.g. to protect steps or projecting edges.

2.1.7 Installation of impact protection bars using reinforcing plates if necessary.

2.1.8 Installation of suitable panic bars provided suitable mounting points are available according to information supplied by the door manufacturer.

2.1.9 Augmentation of z-type and steel corners on steel frames and the installation of wall infill panels in the case of wooden frames.

2.1.10 Attachment with adhesives of wooden, plastic, aluminium or steel strips in any form and position on panes of glass.

2.1.11 On wooden doors, the attachment with adhesives or nails of wooden battens up to approx. 60 x 30 mm, but max. 12 dm3 per side, and the attachment of decorative strips on wooden frames.

2.2 Permissible changes and additions, which may only be carried out when the fire door is manufactured.
The modifications and additions listed below must be confirmed by drawings. The drawings must be approved by the test centre(s) which has/have carried out the performance tests for the approval process.

2.2.1 Surface attachment of a safety device to initiate a signal:
- Stuck on the outside up to 1 mm thick;
- Attached to the outside of wooden doors, on plywood panels with wires;
- Attached to the outside of steel doors, on fibre/calcium-silicate panels with wires, if necessary with all-over metal cladding.
- Films up to 1 mm in thickness on the side of steel doors.

2.2.2 Additional installation of contacts in the door or frame, or the provision of apertures for contacts of this type.

2.2.3 An additional deadbolt lock (motorized lock assembly) mounted in or on the door. When mounted in the door, a lock aperture must be made which must correspond in configuration to the thickness of the insulating material prescribed for the lock area of the approved door.

2.2.4 The installation of suitable electric strikes operating in accordance with the fail-locked operation principle, in as far as these consist of materials with a melting point not below 1.000°C. These electric strikes may not be used on revolving doors equipped with a spring hinge as a closer.
They must not be operated with continuous unlocking function.

2.2.5 The installation of additional locking pins/lugs on the hinge side and additional hinges.

2.2.6 The use of stainless steel sheets instead of (standard) steel sheets of the same gauge.

2.2.7 The arrangement of lock and door handle at a non-standard height (variation up to approx. 200 mm), e.g. for nursery schools.

2.2.8 Ducting of cables in the door;
- in the case of steel doors in a protective metal tube (e.g. PG 7);
- in wooden doors, in a drilled channel up to 8 mm in diameter or a groove up to 8 mm x 8 mm.

2.2.9 Modification of the following frame dimensions:
- Increased surround widths;
- Bevelled surround, e.g. shadow-casting aperture.

2.2.10 Installation of mounting facilities for suitable panic bars (see 2.1.8).

2.2.11 In addition to the existing lock system, the attachment of mounting plates for holding magnets for electromagnetic locking devices. Suitable mounting points for this purpose are to be provided in the door during manufacture. 1)

2.2.12 If doors are installed in frames not recessed in to the floor, an additional tie bar must be installed on both long sides, 60 mm ± 20 mm above the finished floor level.

3. Implementation

In implementing permissible modifications and additions, the following must be observed:

3.1 Modifications and additions must not impair the functional efficiency of the fire door (e.g. self-closing property).

3.2 Apart from the markings described in the approval document, doors with the specified modifications and amendments need no additional marking.

3.3 In the case of locks (2.1.2), panic bars (2.1.8 and 2.2.10), and electric strikes (2.2.4), only suitable configurations may be used. Evidence of suitability must be provided by a mechanical strength and endurance test (Section 2.3.5 of the "Guidelines for the approval of fire doors", February 1983 Notice issued by the German Institute of Building Technology Volume 3/1983).

3.4 If existing fire doors are renovated (modernized), the frames of such doors (in so far as they are adequately secured) must remain in situ. The frames of new fire doors may be secured to existing frames, if necessary with suitable connecting components. The new frames must fully enclose the old, existing frames. Cavities between frames or between the frame and the wall are to be packed with mortar.

4. This version contains additions to the Notices of the German Institute of Building Technology, 20th year, No. 4, dated August 1, 1989. In as far as the information given in notices of approval relates to the publication dated August 1, 1989, the said information is superseded by the present version, which will be published in forthcoming Notices of the Institute.

5. This review of modifications to fire doors may only be reproduced in full.

[1] For information on the admissibility of electrical locking devices in doors in escape routes, see "Notices" 20th year, no. 2 dated March 31, 1989.

- Compact-design security strike
- Mounting depth and housing width as for standard door release
- Precision cast steel housing
- With adjustable Fafix keep

Model number 12 V DC with monitoring contact and recovery diode for access control systems.

14206FF | 021 | 35 | E4 | 4/5

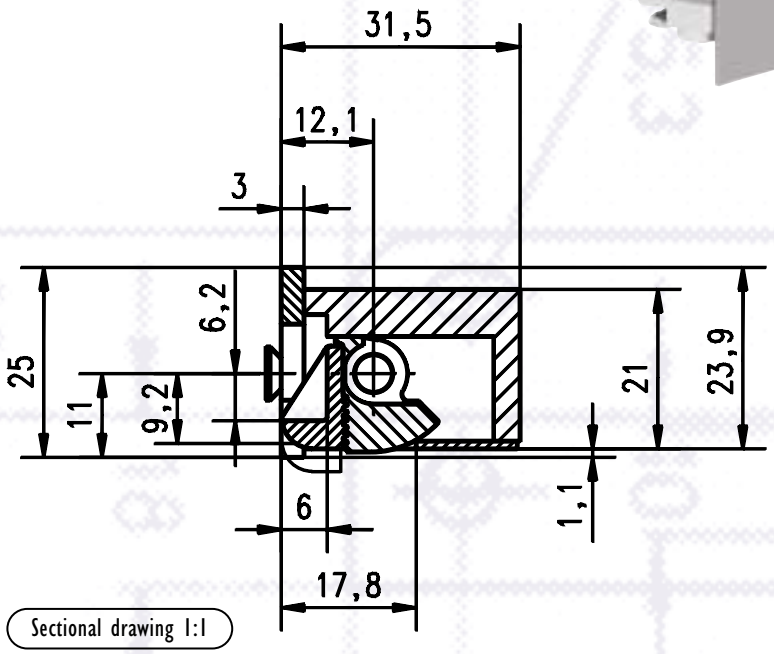

Sectional drawing 1:1

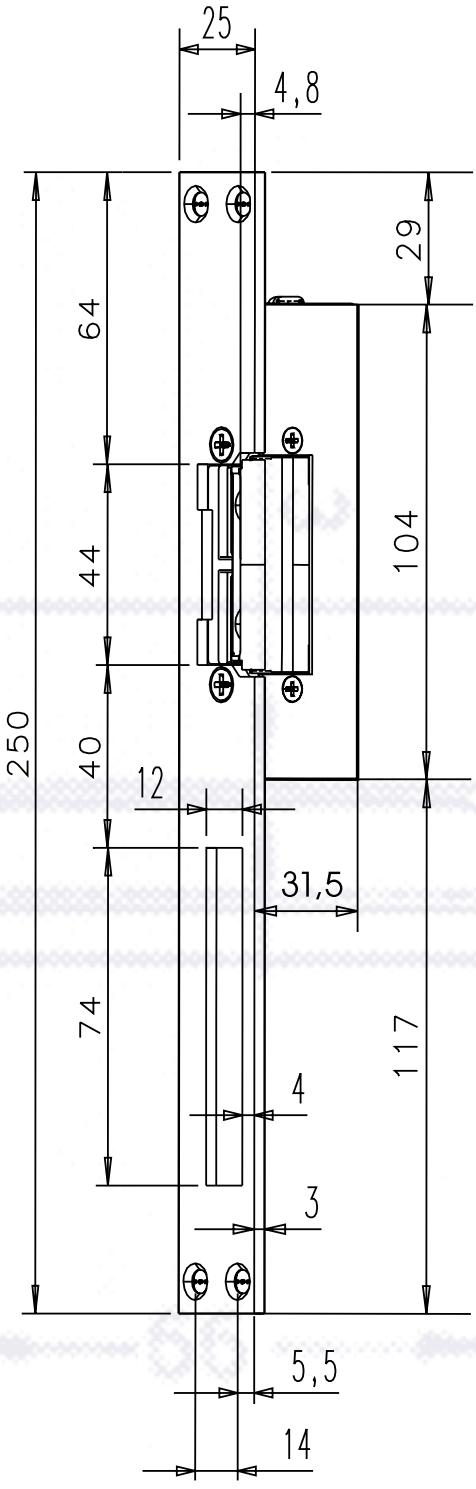

EDP order data:

142FF---|021|35|D1|4/5

Specifications and Variants: **Strikes:** Page 77 · **Striking plates:** from page 123 ➔➔

Specifications	
Standard break-in resistance	10000 N
Break-in resistance FaFix	6500 N
Material: Housing/keep standard	Precision cast steel/steel
Material: Housing/keep/surface-m. attachment Fafix	Precision cast steel/precision cast steel/steel
Operating temperature range	-15 °C to +40 °C
Mounting independent of position	No

Electrical data At 20 °C Model Series: 142, 342 Coil type		Operating temperature range Tolerance range	Rated resistance in Ohm	AC current consumption in mA	DC current consumption in mA (50% residual ripple)	DC current consumption in mA (stabilized)	Operating noise during AC operation*	Operating noise during DC operation* (50% residual ripple)	Keep pre-load max. in N with AC	Keep pre-load max. in N with DC (50% residual ripple)	Keep pre-load max. in N with DC (stabilized)
6-12 V (6-V operation)	D1	as specified	7,7	550	740	780	4	1	160	40	10
6-12 V (12-V operation)	D1	as specified	7,7	1100	1480	1560	3	1	90	100	70

*For operating noise, see diagram page 235. Explanation of technical data page 234.

- Stable precision cast steel housing
- Reliable unlocking under pre-load
- Dimensions compatible for model series 141
- Horizontal mounting admissible

Model number 12 V DC with monitoring contact and recovery diode for access control systems.

13106FF | 028 | 35 | E3 | 4/5

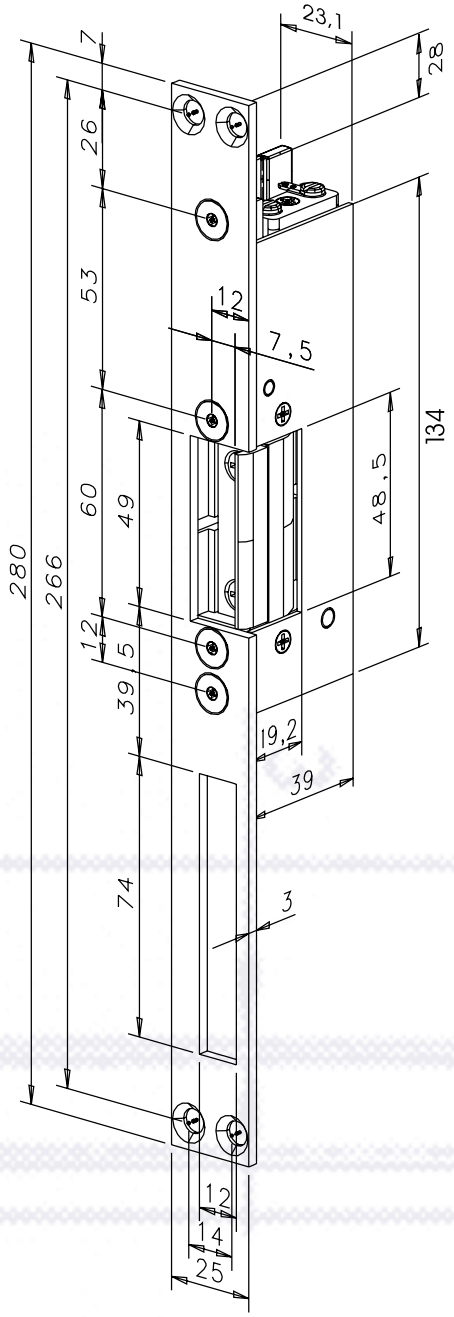

EDP order data:

131FF--|028|35|E3| 4/5

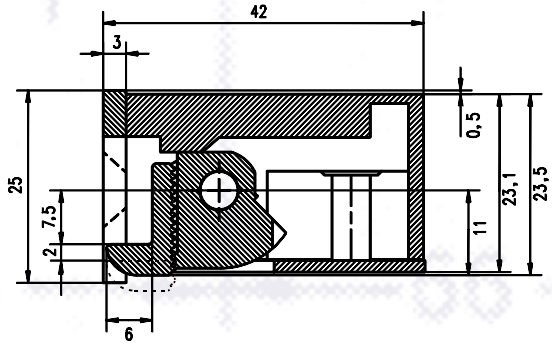

Sectional drawing 1:1

Specifications and Variants: **Strikes:** Page 81 · **Striking plates:** from page 215 ➔➔

Specifications	
Standard break-in resistance	15000 N
Break-in resistance FaFix	10000 N
Material: Housing/keep standard	Precision cast steel/steel
Material: Housing/keep/surface-m. attachment Fafix	Precision cast steel/precision cast steel/steel
Operating temperature range	-15 °C to +40 °C
Mounting independent of position	No

Electrical data At 20 °C Model series: 131 Coil type		Operating temperature range Tolerance range	Rated resistance in Ohm	AC current consumption in mA	DC current consumption in mA (50% residual ripple)	DC current consumption in mA (stabilized)	Operating noise during AC operation*	Operating noise during DC operation* (50% residual ripple)	Keep pre-load max. in N with AC	Keep pre-load max. in N with DC (50% residual ripple)	Keep pre-load max. in N with DC (stabilized)
12 V eE	E3	±1	42,0	160	275	285	3	0	150	150	150

*For operating noise, see diagram page 235. Explanation of technical data page 234.

- Stable design
- Proven technology from reputable manufacturers of fire door strikes in the standard range

Model number 12 V DC with monitoring contact and recovery diode for access control systems.

14106FF | 028 | 35 | D1 | 4/5

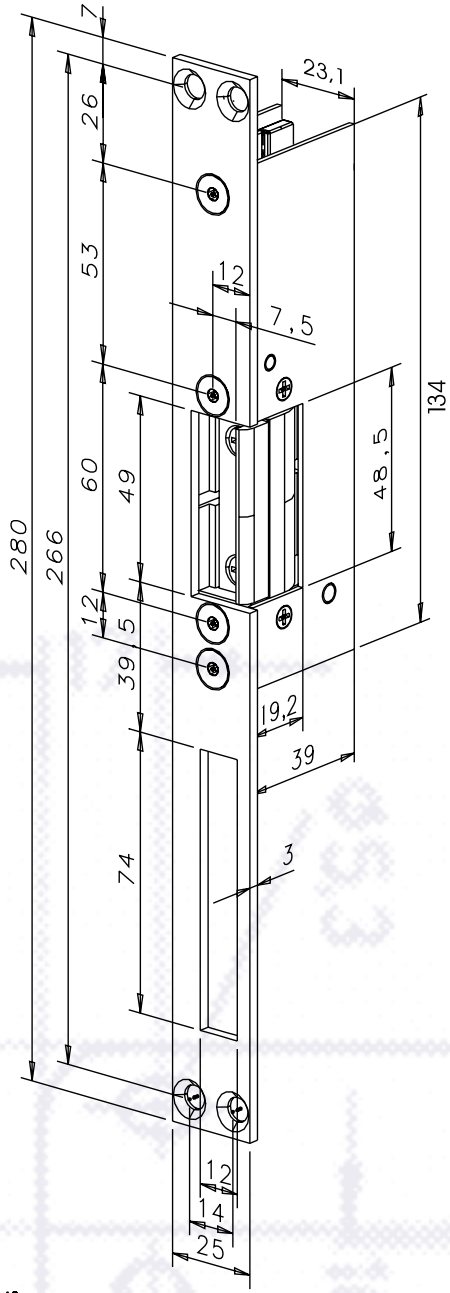

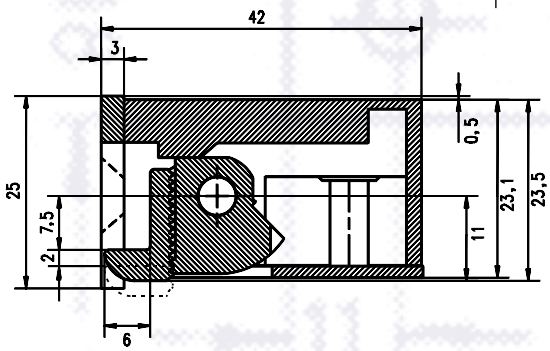

Sectional drawing 1:1

EDP order data:

141FF--|028|35|D1|4/5

Specifications and Variants: **Strikes:** Page 83 · **Striking plates:** from page 215 ➔➔

Specifications	
Standard break-in resistance	15000 N
Break-in resistance FaFix	10000 N
Material: Housing/keep standard	Precision cast steel/steel
Material: Housing/keep/surface-m. attachment Fafix	Precision cast steel/precision cast steel/steel
Operating temperature range	-15 °C to +40 °C
Mounting independent of position	No

Electrical data At 20 °C Model Series: 141, 141FF Coil type		Operating temperature range Tolerance range	Rated resistance in Ohm	AC current consumption in mA	DC current consumption in mA (50% residual ripple)	DC current consumption in mA (stabilized)	Operating noise during AC operation*	Operating noise during DC operation* (50% residual ripple)	Keep pre-load max. in N with AC	Keep pre-load max. in N with DC (50% residual ripple)	Keep pre-load max. in N with DC (stabilized)
8-12 V (8-V operation)	D1	as specified	6,2	480	1270	1300	4	1	160	120	80
8-12 V (12-V operation)	D1	as specified	6,2	870	1850	1950	4	0	160	160	110

*For operating noise, see diagram page 235. Explanation of technical data page 234.

- Compact-design security strike
- Mounting depth and housing width as for standard door release
- Precision cast steel housing
- With adjustable FaFix keep
- Special model for horizontal mounting model 1422

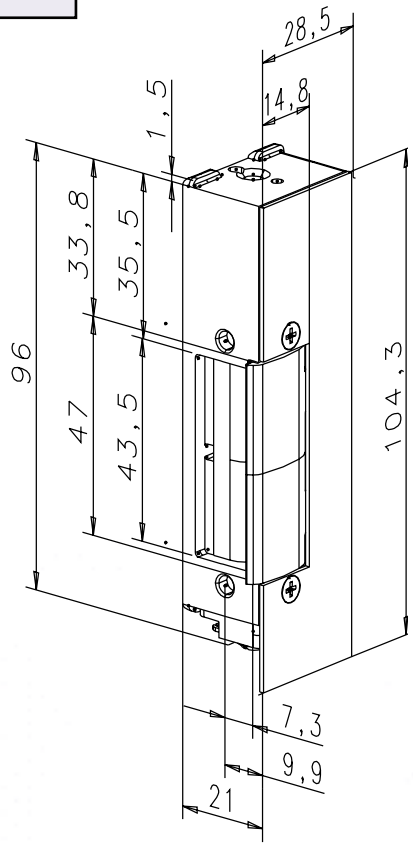

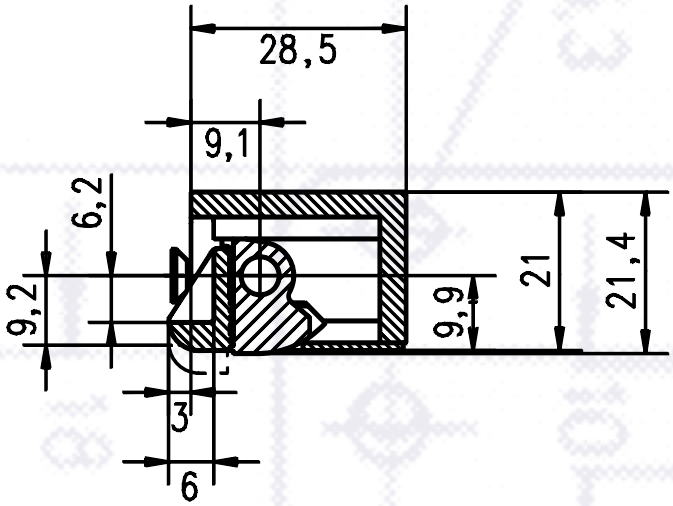

FaFix (FF) version

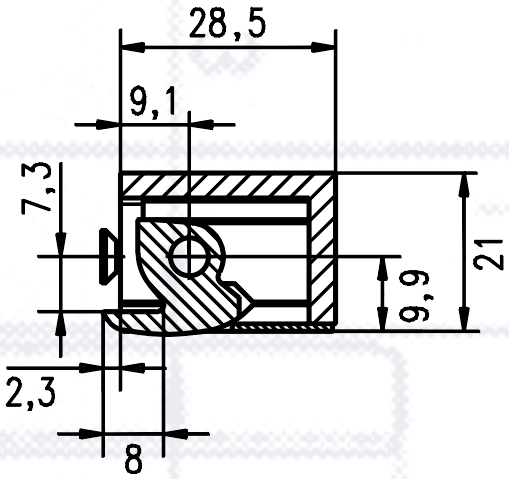

Sectional drawing 1:1

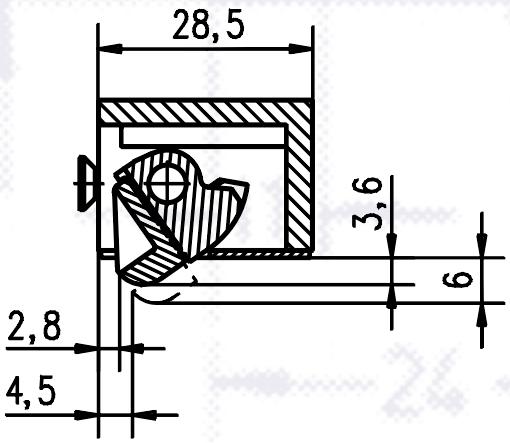

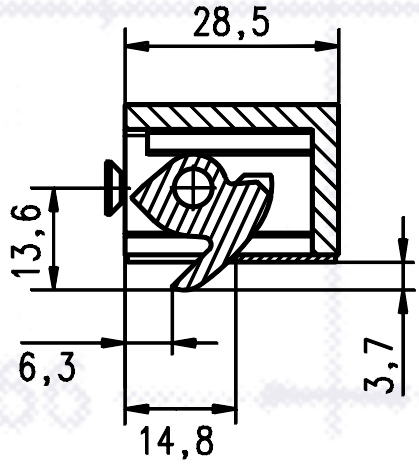

Standard version

Striking plates: from page 123 ➔➔

Specifications	
Standard break-in resistance	10000 N
Break-in resistance FaFix	6500 N
Material: Housing/keep standard	Precision cast steel/steel
Material: Housing/keep/surface-m. attachment Fafix	Precision cast steel/precision cast steel/steel
Operating temperature range	-15 °C to +40 °C
Mounting independent of position	No

Electrical data At 20 °C		Operating temperature range Tolerance range	Rated resistance in Ohm	AC current consumption in mA	DC current consumption in mA (50% residual ripple)	DC current consumption in mA (stabilized)	Operating noise during AC operation*	Operating noise during DC operation* (50% residual ripple)	Keep pre-load max. in N with AC	Keep pre-load max. in N with DC (50% residual ripple)	Keep pre-load max. in N with DC (stabilized)
6-12 V (6-V operation)	D1	as specified	7,7	550	740	780	4	1	160	40	10
6-12 V (12-V operation)	D1	as specified	7,7	1100	1480	1560	3	1	90	100	70
8-16 V (8-V operation) replaces 12 V intercom	R1	as specified	16,5	350	470	485	4	0	90	30	10
8-16 V (12-V operation) replaces 12 V intercom	R1	as specified	16,5	500	710	725	4	1	110	70	50
8-16 V (16-V operation) replaces 12 V intercom	R1	as specified	16,5	700	940	970	4	0	60	70	30
12 V eE	E3	±1 V	60,0	130	190	200	3	1	50	20	10
24 V eE	F3	±2 V	230,0	70	100	105	4	0	60	20	10
12 V fail-unlocked 3-type	E9	±1 V	61,0		180	195		0			
24 V fail-unlocked 3-type	F9	±2 V	200,0		115	120		0			

*For operating noise, see diagram page 235. Explanation of technical data page 234.

Order data, model series 142, 342 — **Order number** = blue area

Model		342		Design		Striking plate		Colour		Voltage		DIN orientation	
Digits 1 - 7						Digits 8 - 10		Digits 11 + 12		Digits 13 + 14		Digit 15	
142	142	GRM	A	FIX	F	HZ	021	EST	35	6-12 V	D1	DL	4
342	342	S	S	FAFIX	FF	iW	066	galvanized	40	8-16 V	R1	DR	5
14205	14205					HZF	033	grey	02	12 V Intercom	E5		
34205	34205							gold	01	12 V eE	E3		
1422	1422									24 V eE	F3		
										Fail unlocked 12 V (342)	E9		
										Fail unlocked 24 V (342)	F9		
						Possible combinations are indicated in the striking plate tables.		Possible colours Page 236.		Only specify 12 or 24 V fail unlocked with model 342.		For indication of the DIN orientation, please note the striking plate table and the selected striking plate.	

*FAFIX and keep guide cannot be combined. Digit 1 - 7: A = DR connecting terminals also DR below (short strike side). Digit 1 - 7: S = Connecting terminals always above (long strike side) DIN = 4/5. For possible combinations, please see the price list. Striking plates with keep guide are only supplied with mounted strike. The keep is adjusted in the factory to the keep guide. The first 7 digits can vary for special models. Please enquire with us regarding the designation for special models. For possible combinations, please see the price list. 1422 = Special model suitable for horizontal mounting.

→ Transfer number to order fax sheet on page 242.

- The universal strike in a solid design
- Suitable for all commonly used striking plates
- Combinable with striking plates with keep guide
- Safety strike in compact design
- Mounting depth and housing width as for standard door release
- Precision cast steel housing
- With adjustable FaFix keep

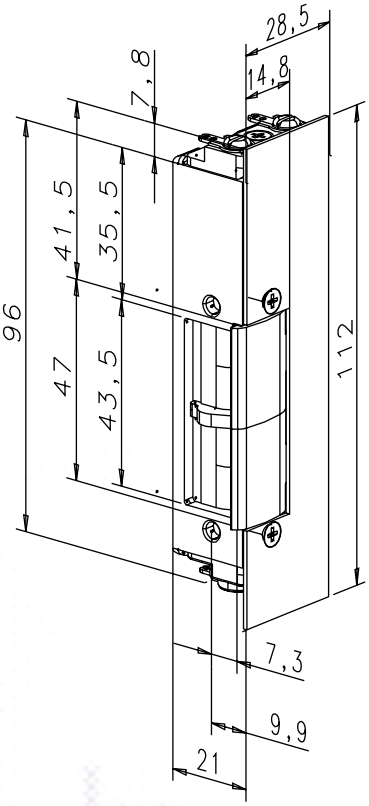

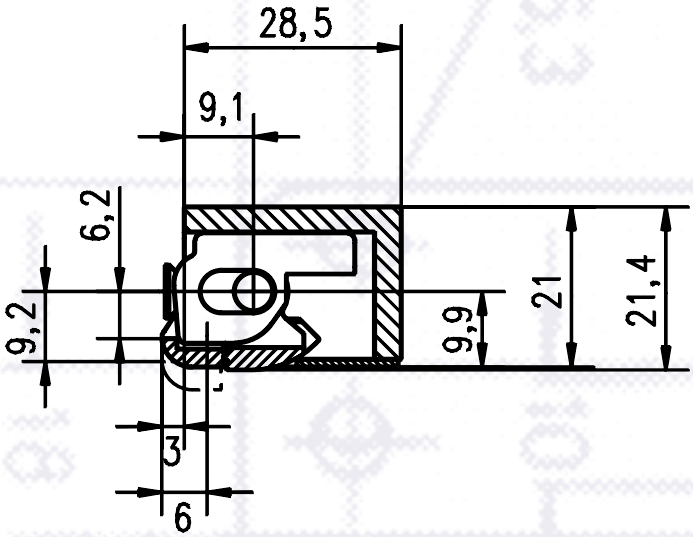

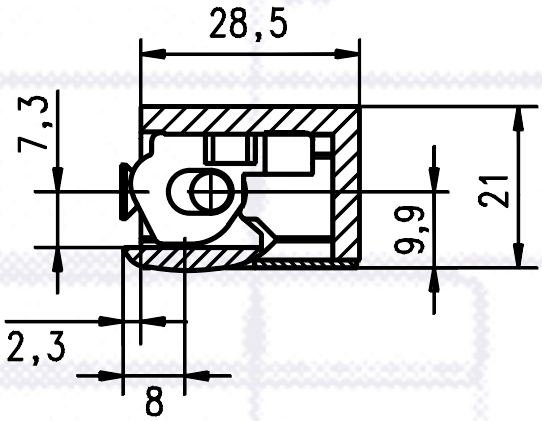

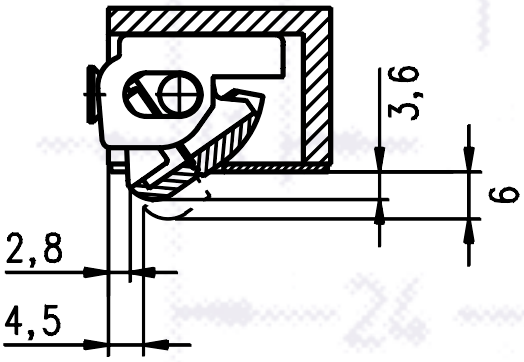

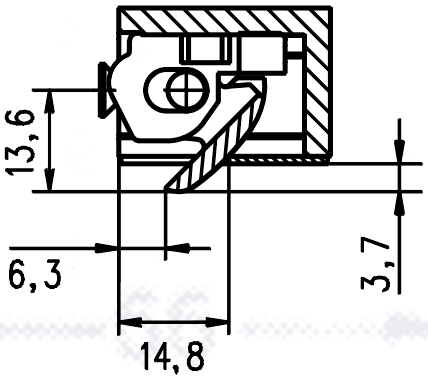

FaFix (FF) version

Sectional drawing 1:1

Standard version

Striking plates: from page 123 ➔➔

Specifications	
Standard break-in resistance	10000 N
Break-in resistance FaFix	6500 N
Material: Housing/keep standard	Precision cast steel/steel
Material: Housing/keep/surface-m. attachment Fafix	Precision cast steel/precision cast steel/steel
Operating temperature range	-15 °C to +40 °C
Mounting independent of position	No

Attention!

The mentioned fail-safe versions (342) E9/F9 are not suitable for fire rated doors and are not allowed to be used for this application. Because of their improved stability (steel housing) they are being used as security strikes.

Electrical data At 20 °C		Operating temperature range Tolerance range	Rated resistance in Ohm	AC current consumption in mA	DC current consumption in mA (50% residual ripple)	DC current consumption in mA (stabilized)	Operating noise during AC operation*	Operating noise during DC operation* (50% residual ripple)	Keep pre-load max. in N with AC	Keep pre-load max. in N with DC (50% residual ripple)	Keep pre-load max. in N with DC (stabilized)
6-12 V (6-V operation)	D1	as specified	7,7	550	740	780	4	1	160	40	10
6-12 V (12-V operation)	D1	as specified	7,7	1100	1480	1560	3	1	90	100	70
8-16 V (8-V operation) replaces 12 V intercom	R1	as specified	16,5	350	470	485	4	0	90	30	10
8-16 V (12-V operation) replaces 12 V intercom	R1	as specified	16,5	500	710	725	4	1	110	70	50
8-16 V (16-V operation) replaces 12 V intercom	R1	as specified	16,5	700	940	970	4	0	60	70	30
12 V eE	E3	±1 V	60,0	130	190	200	3	0	50	20	10
24 V eE	F3	±2 V	230,0	70	100	105	4	0	60	20	10
12 V fail-unlocked 3-type	E9	±1 V	61,0		180	195		0			
24 V fail-unlocked 3-type	F9	±2 V	200,0		115	120		0			

*For operating noise, see diagram page 235. Explanation of technical data page 234.

Order data, model series 142RR, 342RR — **Order number** = blue area

Model		Design		Striking plate		Colour		Voltage		DIN orientation	
Digits 1 - 7				Digits 8 - 10		Digits 11 + 12		Digits 13 + 14		Digit 15	
142RR	142RR	FIX	F	HZ	021	EST	35	6-12 V	D1	DL	4
342RR	324RR	FAFIX	FF	iW	066	galvanized	40	8-16 V	R1	DR	5
14205RR	14206			HZF	033	grey	02	12 V Intercom	E5		
34205RR	34206			Possible combinations are indicated in the striking plate tables.		gold	01	12 V eE	E3		
						Possible colours Page 236.		24 V eE	F3		
								Fail unlocked 12 V (342)	E9	For indication of the DIN orientation, please note the striking plate table and the selected striking plate.	
								Fail unlocked 24 V (342)	F9		
								Only specify 12 or 24 V fail unlocked with model 342.			

→ Transfer number to order fax sheet on page 242.

**Striking plates with keep guide (HZF, KF, LAP) cannot be combined with FIX and FAFIX.
For possible combinations, please see the price list. Striking plates with keep guide are only supplied with mounted strike.
The keep is adjusted in the factory to the keep guide. The first 7 digits can vary for special models. Please enquire with us regarding the designation for special models.

- Stable precision cast steel housing
- Reliable unlocking under pre-load
- Dimensions compatible for model series 141
- Horizontal mounting admissible

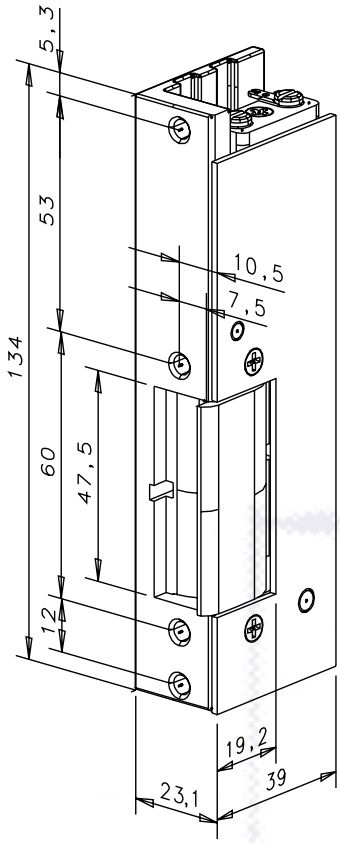

Sectional drawing 1:1

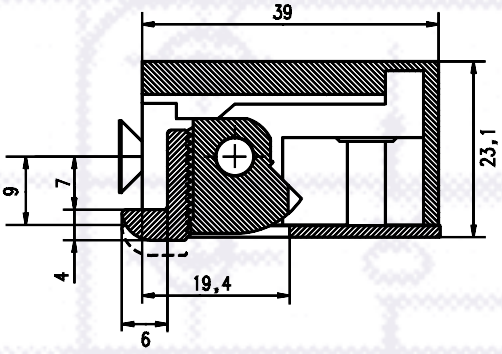

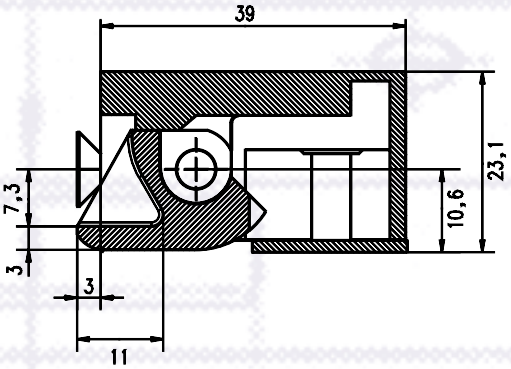

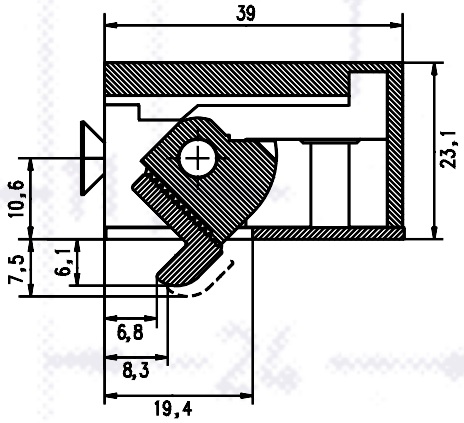

FaFix (FF) version

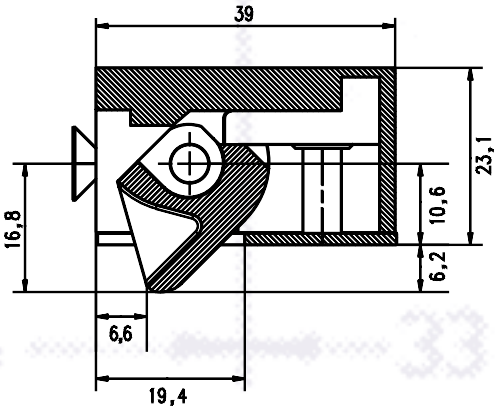

Standard version

Striking plates: from page 215 ➔➔

Specifications	
Standard break-in resistance	15000 N
Break-in resistance FaFix	10000 N
Material: Housing/keep standard	Precision cast steel/steel
Material: Housing/keep/surface-m. attachment Fafix	Precision cast steel/precision cast steel/steel
Operating temperature range	-15 °C to +40 °C
Mounting independent of position	Yes

Electrical data At 20 °C		Operating temperature range Tolerance range	Rated resistance in Ohm	AC current consumption in mA	DC current consumption in mA (stabilized)	Operating noise during AC operation*	With Model	Keep pre-load max. in N with AC	Keep pre-load max. in N with DC (stabilized)
12 V eE	E3	±1 V	42,0	160	285	3	Standard	250	250
							FAFIX	150	150
24 V eE	F3	±2 V	175,0	70	140	3	Standard	250	250
							FAFIX	150	150
12 V AC/DC	E1	±1 V	11,5	1000	1040	3	Standard	1000	1000
							FAFIX	600	600
24 V AC/DC	F1	±2 V	43,0	550	560	3	Standard	1000	1000
							FAFIX	600	600

*For operating noise, see diagram page 235. Explanation of technical data page 234.

Order data, model series 131 — **Order number** = blue area

Model		Design				Striking plate		Colour		Voltage		DIN orientation	
Digits 1 - 7						Digits 8 - 10		Digits 11 + 12		Digits 13 + 14		Digit 15	
131	131	RR	RR	FAFIX	FF	HZ	028	EST	35	12 V AC/DC	E1	DL mounted	4
13105	13105					HZF	031	galvanized	40	24 V AC/DC	F1	DR mounted	5
						kL	116	grey	02	12 V eE	E3		
Special models 131						kF	030	gold	01	24 V eE	F3		
Digits 1 - 7						SiHZ	024						
13105 RRFF Diode		13106FF				SiiW/3	071	Possible colours Page 236.				For indication of the DIN orientation, please note the striking plate table and the selected striking plate.	
						S-737	451						
						HZ878	003						
						HZF878	095						

*Striking plates with keep guide (HZF, KF, LAP) cannot be combined with FIX and FAFIX.
For possible combinations, please see the price list. Striking plates with keep guide are only supplied with mounted strike.
The keep is adjusted in the factory to the keep guide. The first 7 digits can vary for special models. Please enquire with us regarding the designation for special models.

Transfer number to order fax sheet on page 242.

- Stable design
- Proven technology from reputable manufacturers of fire door strikes in the standard range

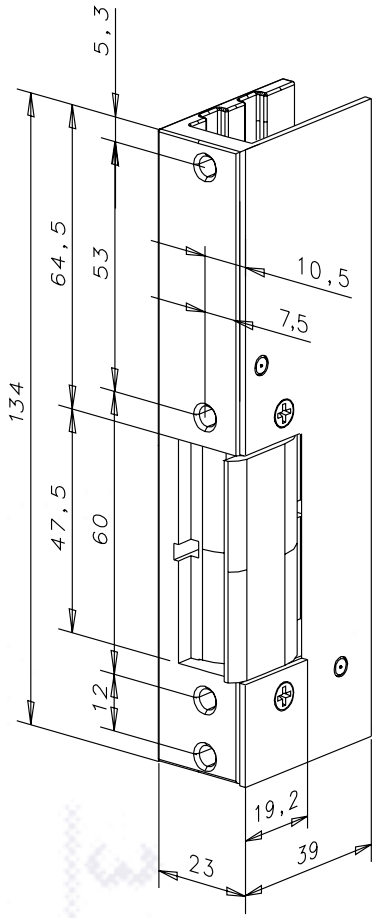

Sectional drawing 1:1

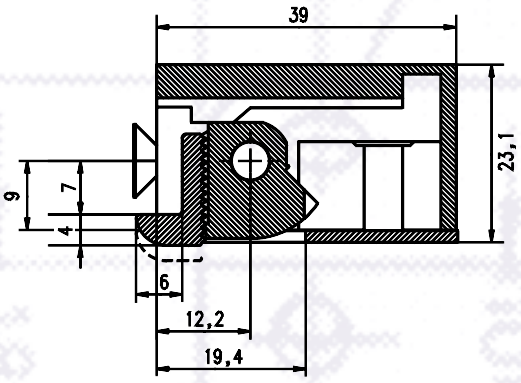

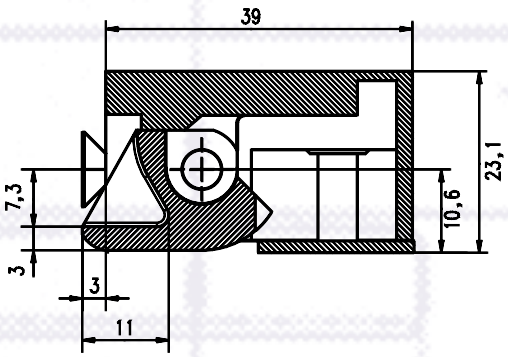

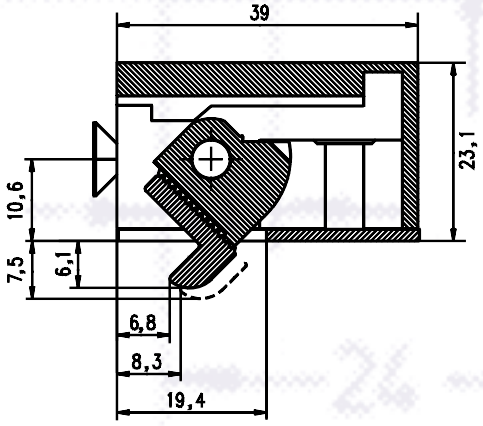

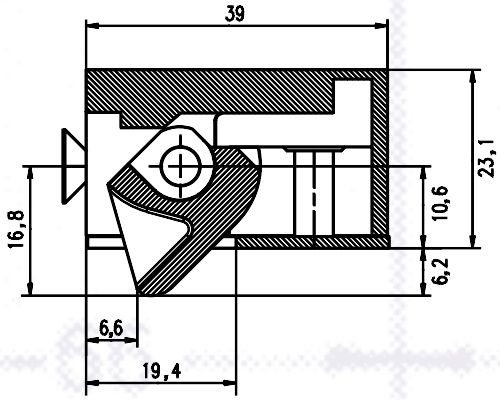

FaFix (FF) version

Standard version

Striking plates: from page 215 ➔➔

Specifications	
Standard break-in resistance	15000 N
Break-in resistance FaFix	10000 N
Material: Housing/keep standard	Precision cast steel/steel
Material: Housing/keep/surface-m. attachment Fafix	Precision cast steel/precision cast steel/steel
Operating temperature range	-15 °C to +40 °C
Mounting independent of position	No

Electrical data At 20 °C		Operating temperature range Tolerance range	Rated resistance in Ohm	AC current consumption in mA	DC current consumption in mA (50% residual ripple)	DC current consumption in mA (stabilized)	Operating noise during AC operation*	Operating noise during DC operation* (50% residual ripple)	Keep pre-load max. in N with AC	Keep pre-load max. in N with DC (50% residual ripple)	Keep pre-load max. in N with DC (stabilized)
8-12 (8-V operation)	D1	as specified	6,2	480	1270	1300	4	1	160	120	80
8-12 (12-V operation)	D1	as specified	6,2	870	1850	1950	4	0	160	160	110
12 V eE	E3	±1 V	31,0	300	390	400	4	1	160	60	40
24 V eE	F3	±2 V	153,0	65	155	160	4	0	160	50	40

*For operating noise, see diagram page 235. Explanation of technical data page 234.

Order data, model series 141						Order number = blue area			
Model		Design	Striking plate		Colour		Voltage		DIN orientation	
Digits 1 - 7			Digits 8 - 10		Digits 11 + 12		Digits 13 + 14		Digit 15	
141	141	RR RR FAFIX FF	HZ	028	EST	35	8-12 V	D1	DL mounted	4
14105	14105		HZF	031	galvanized	40	12 V eE	E3	DR mounted	5
			kL	116	grey	02	24 V eE	F3		
Special models 141			kF	030	gold	01				
Digits 1 - 7			SiHZ	024						
14105 RRFF Diode	14106FF		SiiW/3	071	Possible colours Page 236.				For indication of the DIN orientation, please note the striking plate table and the selected striking plate.	
RR AKRR DL	141.80		S-737	451						
RR AKRR	141.81		HZ878	003						
RR AKRR FF DL	141FF 80		HZF878	095						
RR AKRR FF DR	141FF 81									

→ Transfer number to order fax sheet on page 242.

**Striking plates with keep guide (HZF, KF, LAP) cannot be combined with FIX and FAFIX.
For possible combinations, please see the price list. Striking plates with keep guide are only supplied with mounted strike.
The keep is adjusted in the factory to the keep guide. The first 7 digits can vary for special models. Please enquire with us regarding the designation for special models.

Model series 331

The fail-unlocked strike 331 was designed especially to be used for locking doors in escape routes. The situation as regards building regulations and use in fire doors is described in the brochure FT/Emergency exit systems. As a result of reliable unlocking under pre-load, max. 5000 N, this security strike is also used on doors not subject escape route requirements. In interlock systems, soundproofed doors and doors whose design makes them subject to pressure on the keep, series 331 guarantees reliable function.

The dimensions correspond to those of model series 131 (see page 80). For detailed drawings, see our brochure FT/Emergency exit systems.

Complement for the High-Security Strike

807-10-------00

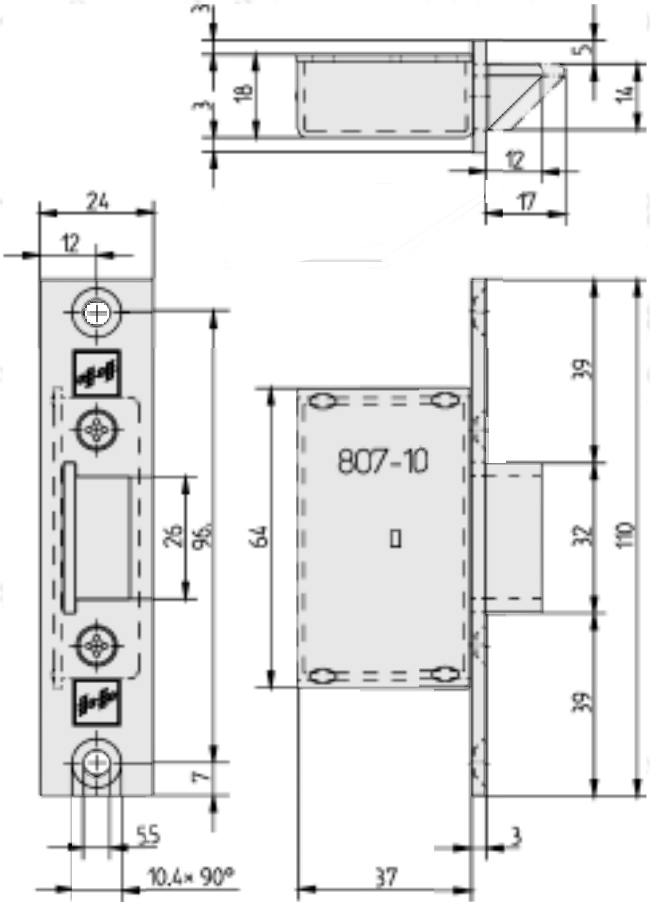

Striking plates: from page 215 ➔➔

Specifications	
Standard break-in resistance	7500 N
Material: Housing/keep standard	Precision cast steel/steel
Material: Housing/keep/ surface-m. attachment Fafix	Precision cast steel/precision cast steel/steel
Operating temperature range	-15 °C to +40 °C
Mounting independent of position	Yes

Important notice

The safety strike for escape routes is designed as an additional locking device for fire rated doors, not to be combined with the main lock. It may not be installed in order to operate the main lock as this could de-activate the function of the fire rated door. The strike and the complementary counterpart 807-10 are tested according to the current standards and are approved for the locking of doors within escape routes.

Electrical data At 20 °C Model series 331 Coil type		Operating temperature range Tolerance range	Rated resistance in Ohm	DC current consumption in mA	Keep pre-load max. in N
12 V	E9	±1 V	37,5	320	5000
24 V	F9	±2 V	150,0	160	5000

*For operating noise, see diagram page 235. Explanation of technical data page 234.

Order data, model series 331								Order number = blue area			
Model		**Design**		**Striking plate**		**Colour**		**Voltage**		**DIN orientation**	
Digits 1 - 7				Digits 8 - 10		Digits 11 + 12		Digits 13 + 14		Digit 15	
331	331	RR	RR	HZ	028	EST	35	12 V	E9	DL	4
	331.80			HZF	031	galvanized	40	24 V	F9	DR	5
				kL	116	grey	02				
Special models				kF	030	gold	01				
Digits 1 - 7				SiHZ	024						
331RRAKRR DL		331.80		SiiW/3	071	Possible colours Page 236.				For indication of the DIN orientation, please note the striking plate table and the selected striking plate.	
331RRAKRR DR		331.81		S-737	451						
331RRAKRR FAFIX DL		331.80FF		HZ878	003						
331RRAKRR FAFIX DR		331.81FF		HZF878	095						

*Striking plates with keep guide (HZF, KF, LAP) cannot be combined with FIX and FAFIX.
For possible combinations, please see the price list. Striking plates with keep guide are only supplied with mounted strike.
The keep is adjusted in the factory to the keep guide. The first 7 digits can vary for special models. Please enquire with us regarding the designation for special models.

→ Transfer number to order fax sheet on page 242.

Information and fundamental mounting principles

- When the door is closed, the keep with fixing plate holds the door leaf in place at the same time.
- The door must have a stop for the door leaf or be actuated by a door closer with adjustable closing force. In the case of two-leaf glass doors, a strike must be integrated at the top in the door frame for each leaf (not suitable for swing doors).
- Models 914 and 914 Zy are secured by a safety bolt against unintentional arresting action by the keep when the door is open.

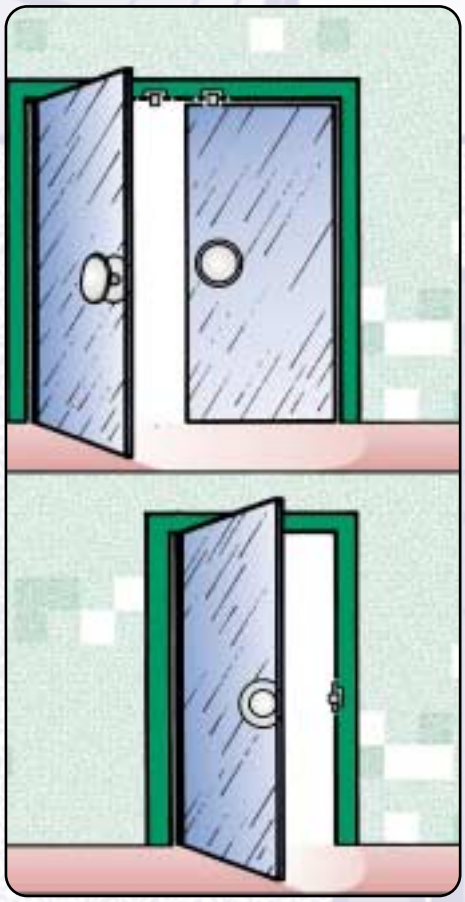

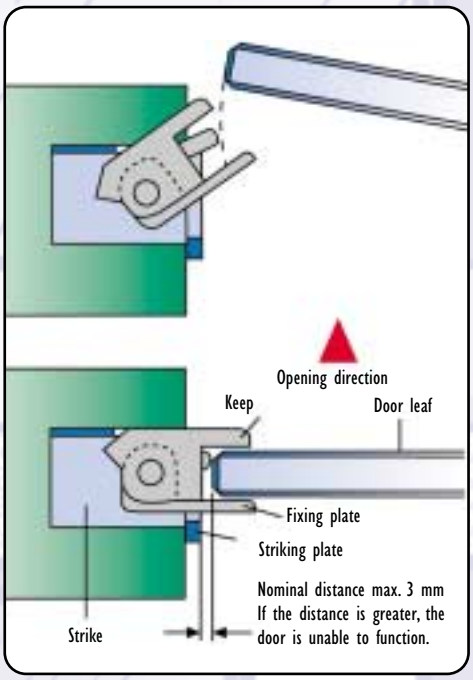
Opening direction
Keep
Door leaf
Fixing plate
Striking plate
Nominal distance max. 3 mm
If the distance is greater, the
door is unable to function.
Strike

Universally usable for DIN left and DIN right mounting by simply turning 180°.
The surface is grey powder coated.

Fail-locked operation:

The door can be opened as long as a contact exists (momentary contact) or in eE types during the permanent application of current. In case of a power failure, the door cannot be opened and remains locked. The strike may not be commissioned until the electrical system is fully functional. When mounting, ensure the correct functional play of the door. The door leaf must glide easily into the keep and press in the safety bolt sufficiently far to ensure that the locking mechanism is initiated.
Distance between the strike and the door leaf max. 3 mm.

Fail unlocked operation:

The door is locked as long as an electrical current is applied to the strike. If the electrical trigger action is switched off or interrupted as the result of a power failure, the strike is movable and the door can be opened.

When mounting ensure the correct functional play of the door. The door leaf must glide easily into the keep.
Distance between the strike and the door leaf max. 3 mm.

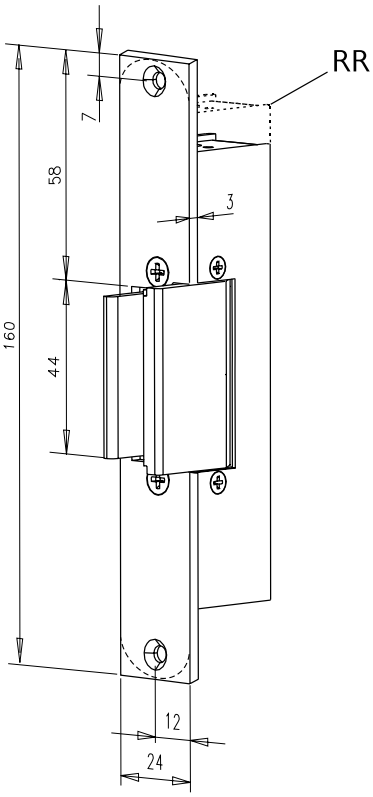

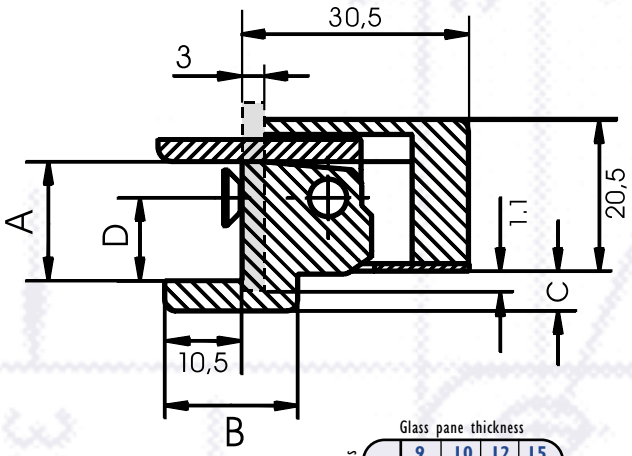

Glass pane thickness

Variable dimensions	9	10	12	15
A	10,0	11,0	13,0	16,1
B	*	*	18,0	18,0
C	*	*	3,0	5,4
D	5,1	6,1	8,1	11,2

* Dimension omitted as keep is flush

Sectional drawing 1:1

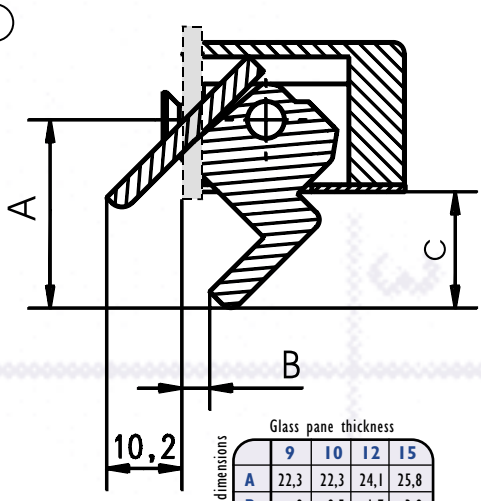

Glass pane thickness

Variable dimensions	9	10	12	15
A	22,3	22,3	24,1	25,8
B	0	0,5	1,7	3,9
C	12,4	12,4	14,2	15,9

Specifications	
Standard break-in resistance	3700 N
Material: housing/keep standard	Die cast zinc/nickel-plated brass
Operating temperature range	-15 °C to +40 °C
Mounting independent of position	Yes

Electrical data At 20 °C Model series: 914, 934 Coil type		Operating voltage Tolerance range	Rated resistance in Ohm	AC current consumption in mA	DC current consumption in mA (50% Residual ripple)	DC current consumption in mA (stabilized)	Operating noise during AC operation*	Operating noise during DC operation* (50% Residual ripple)	Keep pre-load max. in N with AC	Keep pre-load max. in N with DC (50% Residual ripple)	Keep pre-load max. in N with DC (stabilized)
6-12 V (6-V operation)	D1	as specified	7,7	550	740	780	5	1	60	10	10
6-12 V (12-V operation)	D1	as specified	7,7	1100	1480	1560	4	1	90	20	10
8-16 V (8-V operation)	R1	as specified	16,5	350	470	485	5	1	80	10	10
8-16 V (12-V operation)	R1	as specified	16,5	500	710	725	4	1	60	10	10
8-16 V (16-V operation)	R1	as specified	16,5	700	940	970	4	1	60	20	10
12 V eE	E3	±1 V	60,0	130	190	200	4	0	20	10	10
24 V eE	F3	±2 V	230,0	70	100	105	3	0	20	10	10
12 V Fail unlocked 3-type	E9	±1 V	62,0	–	185	195	–	0	–	–	–
24 V Fail unlocked 3-type	F9	±2 V	230,0	–	100	105	–	0	–	–	–

*For operating noise, see diagram page 235. Explanation of technical data page 234.

Order data, model series 934, 914 — Order number = blue area

Model		for glass pane thickness		Striking plate		Colour		Voltage		DIN orientation	
Digits 1 - 7				Digits 8 - 10		Digits 11 + 12		Digits 13 + 14		Digit 15	
914	914	9	9	160 mm angularly symmetric	403	EST	35	6-12 V	D1	UNI	I
934	934	10	10					8-16 V	R1		
91405	91405	12	12	160 mm rounded symmetric	121	EST	35	12 V eE	E3		
93405	93405	15	15					24 V eE	F3		
								Fail unlocked 12 V (934)	E9		
								Fail unlocked 24 V (934)	F9		
				130 mm long	123*	grey	02	only specify 12 or 24 V fail unlocked with model 934, 93405.			
				160 mm long	162*	grey	02				

→ Transfer number to order fax sheet on page 242.

Order data, model series 934RR, 914RR — Order number = blue area

Model		for glass pane thickness		Striking plate		Colour		Voltage		DIN orientation	
Digits 1 - 7				Digits 8 - 10		Digits 11 + 12		Digits 13 + 14		Digit 15	
914RR	914RR	9	9	160 mm angularly symmetric	403	EST	35	6-12 V	D1	UNI	I
934RR	934RR	10	10					8-16 V	R1		
91405RR	91406	12	12	160 mm rounded symmetric	121	EST	35	12 V eE	E3		
93405RR	93406	15	15					24 V eE	F3		
								Fail unlocked 12 V (934)	E9		
								Fail unlocked 24 V (934)	F9		
Possible combinations are given in the striking plate tables.				130 mm long	123*	grey	02	only specify 12 or 24 V fail unlocked with model 934, 93405.		For indication of the DIN orientation, please note the striking plate table and the selected striking plate.	
				160 mm long	162*	grey	02				

→ Transfer number to order fax sheet on page 242.

*Obsolescent model

Special version for profile cylinder. Door release by means of contact button or with key.

- Bolt dimension: 21 mm
- Not reversible
- DIN designation required
- Delivery takes place without profile cylinder
- Surface grey powder coated
- Keep in nickel-plated brass

Mounting instruction:

When mounting, ensure the correct functional play of the door. The door leaf must glide easily into the keep and press in the safety bolt sufficiently far to ensure that the locking mechanism is initiated.
Distance between the strike and the door leaf max. 3 mm.

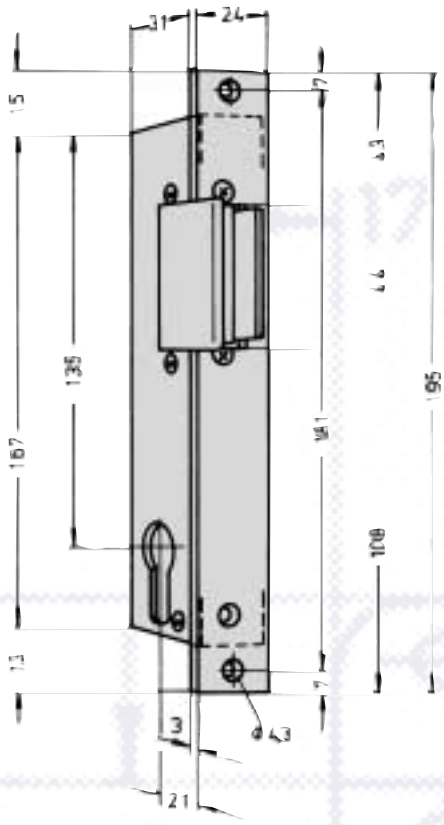

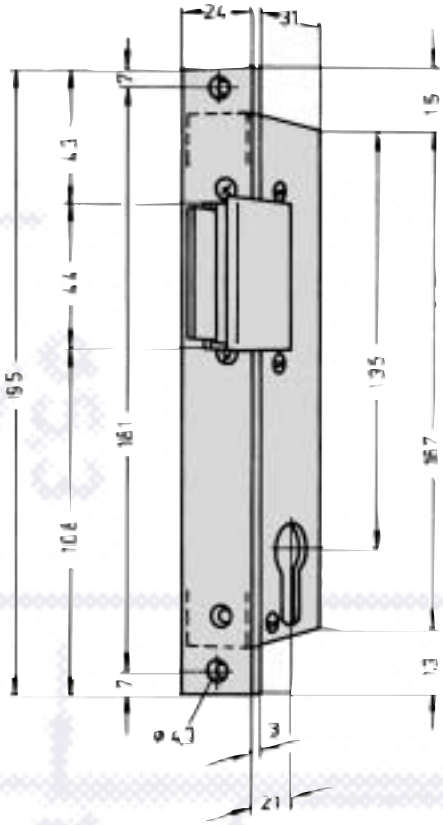

Specifications	
Standard break-in resistance	3700 N
Material: Housing/keep standard	Die cast zinc/nickel-plated brass
Operating temperature range	-15 °C to +40 °C

Please attend to the post-assembly position.

Electrical data At 20 °C Model series: 914 ZY Coil type		Operating voltage Tolerance range	Rated resistance in Ohm	AC current consumption in mA	DC current consumption in mA (50% Residual ripple)	DC current consumption in mA (stabilized)	Operating noise during AC operation*	Operating noise during DC operation* (50% Residual ripple)	Keep pre-load max. in N with AC	Keep pre-load max. in N with DC (50% Residual ripple)	Keep pre-load max. in N with DC (stabilized)
6-12 V (6-V operation)	D1	as specified	7,7	550	740	780	5	1	60	10	10
6-12 V (12-V operation)	D1	as specified	7,7	1100	1480	1560	4	1	90	20	10
8-16 V (8-V operation)	R1	as specified	16,5	350	470	485	5	1	80	10	10
8-16 V (12-V operation)	R1	as specified	16,5	500	710	725	4	1	60	10	10
8-16 V (16-V operation)	R1	as specified	16,5	700	940	970	4	1	60	20	10
12 V eE	E3	±1 V	60,0	130	190	200	4	0	20	10	10
24 V eE	F3	±2 V	230,0	70	100	105	3	0	20	10	10

*For operating noise, see diagram page 235. Explanation of technical data page 234.

Order data, model series 934ZY						Order number = blue area			
Model		for glass pane thickness		Colour		Voltage		DIN orientation	
Digits 1 - 10				Digits 11 + 12		Digits 13 + 14		Digit 15	
914ZY	914ZY	9	9	grey	02	6-12 V	D1	DL	4
91405ZY	91405ZY	10	10			8-16 V	R1	DR	5
		12	12			12 V eE	E3		
		15	15			24 V eE	F3		
				For possible colours, see page 236.					

Transfer number to order fax sheet on page 242.

Compact, functional design, modern environment-neutral design in aluminium. Surface of the counter plate with 6 mm adjustment facility.

In all-glass doors, particularly those with additional fanlight and glass side panels, the particular benefits of this strike are brought to bear: Trouble-free mounting as well as a compact and outstandingly functional design.
No complex mounting fixtures required for installation - simply glue on (special adhesive is provided with each strike). The aluminium masonry box is available for two strike types: fail locked and fail unlocked configurations.
Modern, environment-neutral design of the strike set, which consists of the strike itself and an identically dimensioned mating component.

Please note: Door leaf distance of min. 6 mm.

Fail-locked strike 9314:

- The door can be opened as long as a contact exists (momentary contact). In case of a power failure, the door remains locked.
- It is not possible to open the door in case of a power failure, the door remains locked.
- The strike may not be commissioned until the electrical system is fully functional.

Fail-unlocked strike 9334:

The door is locked as long as an electrical current is applied to the strike. If the electrical trigger action is switched off or interrupted as the result of a power failure, the strike is movable and the door can be opened.

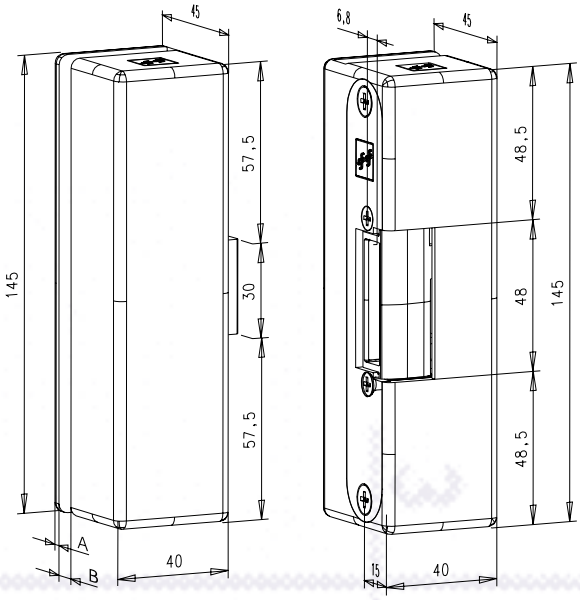

Variable dimensions

Glass pane thickness	8	9	10	11	12	13	15
A	5,0	4,5	4,0	3,5	3,0	2,5	2,0
B	8,1	9,1	10,1	11,1	12,1	13,1	15,1

Specifications	
Standard break-in resistance	6500 N
Material: Housing/keep standard	Die cast zinc/Die cast zinc
Operating temperature range	-15 °C to +40 °C
Mounting independent of position	Yes

Electrical data At 20 °C Model series: 9334VGL, 9334RRVGL Coil type		Operating voltage Tolerance range	Rated resistance in Ohm	DC current consumption in mA (50% Residual ripple)	DC current consumption in mA (stabilized)	Operating noise during DC operation* (50% Residual ripple)	Keep pre-load max. in N with DC (50% Residual ripple)	Keep pre-load max. in N with DC (stabilized)
12 V Fail unlocked 3-type	E9	±1 V	62,0	185	195	0	10	0
24 V Fail unlocked 3-type	F9	±2 V	200,0	115	120	0	10	0

*For operating noise, see diagram page 235. Explanation of technical data page 234.

Order data, model series 9334VGL, 9334RRVGL				Order number = blue area			
Model		for glass pane thickness		Voltage		DIN orientation	
Digits 1 - 12				Digits 13 + 14		Digit 15	
		:					
9334VGL	9334VGL	9	9	Fail unlocked 12 V	E9	UNI	I
9334RRVGL	9334RRVGL	10	10	Fail unlocked 24 V	F9		
933405VGL	933405VGL	12	12				
933405RRVGL	933605VGL	15	15				

→ Transfer number to order fax sheet on page 242.

Electrical data At 20 °C Model series: 9314VGL, 9314RRVGL Coil type		Operating voltage Tolerance range	Rated resistance in Ohm	Overvoltage in V	Undervoltage in V	AC current consumption in mA	DC current consumption in mA (50% Residual ripple)	DC current consumption in mA (stabilized)	Betriebsgeräusch bei AC-Betrieb*	Operating noise during DC operation* (50% Residual ripple)
8-16 V (8-V operation)	R1	as specified	16,5	9,2	6,8	350	470	485	4	I
8-16 V (12-V operation)	R1	as specified	16,5	13,8	10,2	500	710	725	4	I
8-16 V (16-V operation)	R1	as specified	16,5	18,4	13,6	700	940	970	4	I
12 V eE	E3	±1 V	60,0	13,0	11,0	125	190	200	3	0
24 V eE	F3	±2 V	235,0	26,0	22,0	70	100	102	3	0

*For operating noise, see diagram page 235. Explanation of technical data page 234.

Order data, model series 9314VGL, 9314RRVGL				Order number = blue area			
Model		for glass pane thickness		Voltage		DIN orientation	
Digits 1 - 12				Digits 13 + 14		Digit 15	
		:					
9314VGL	9314VGL	9	9	8-16 V	R1	UNI	I
9314RRVGL	9314RRVGL	10	10	12 V eE	E3		
931405RRVGL	931605VGL	12	12	24 V eE	F3	For indication of the DIN orientation, please note the striking plate table and the selected striking plate.	
Possible combinations are given in the striking plate tables.		15	15				

→ Transfer number to order fax sheet on page 242.

ELECTRIC STRIKES FOR DEAD BOLT LOCKS

- Specially designed keep for use with dead bolts
- When the door is open, in contrast to the use of standard strikes, the keep is hinged open and so in position to accept the dead bolt.
- When the door is closed, the keep is moved into the closed position by the dead bolt.
- When no electrical current is applied, in fail locked types the strike is immediately locked.
- When electrical current is applied, in fail unlocked types the strike is immediately locked.
- With fail locked types, the function is additionally controlled by a safety bolt. Only when the safety bolt is actuated by the dead bolt can locking take place. Unintentional locking when the door is open is thus reliably prevented.

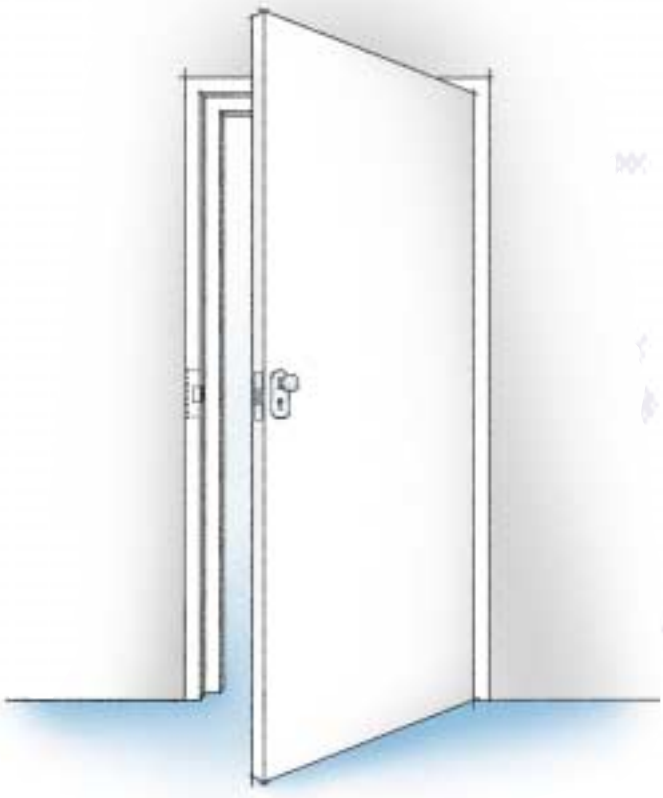

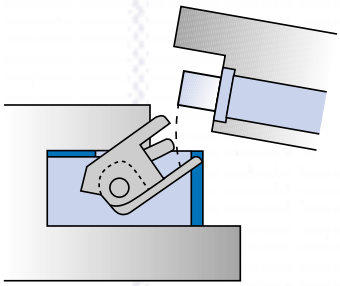

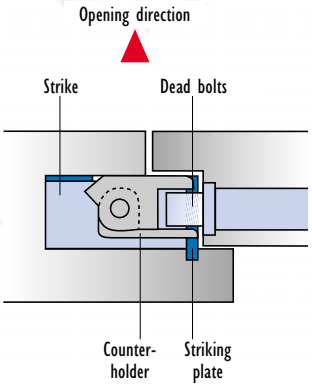

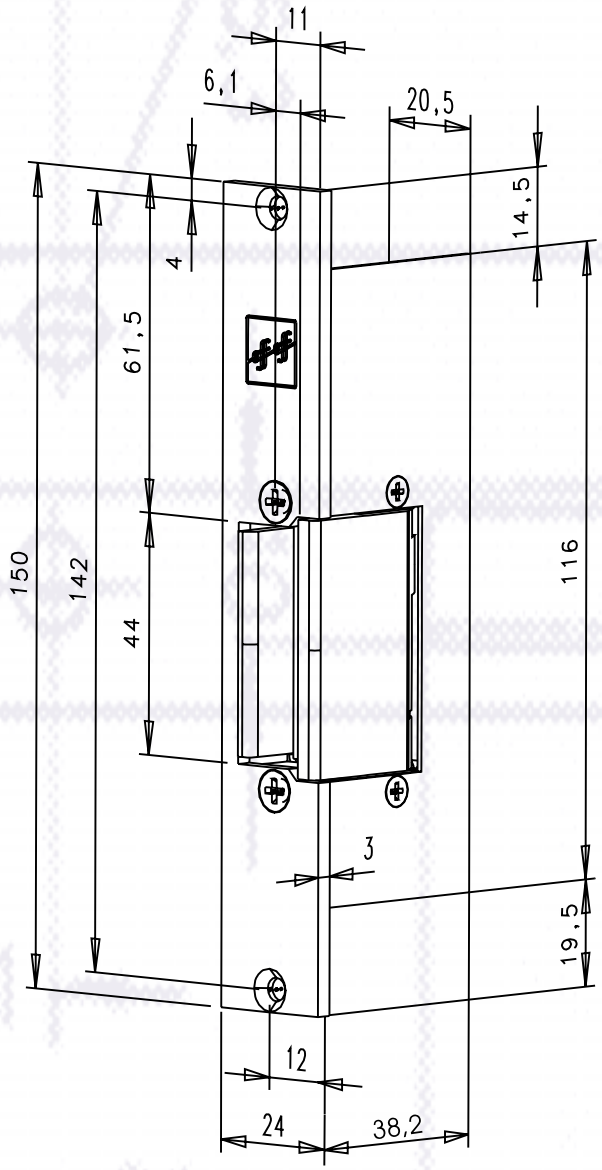

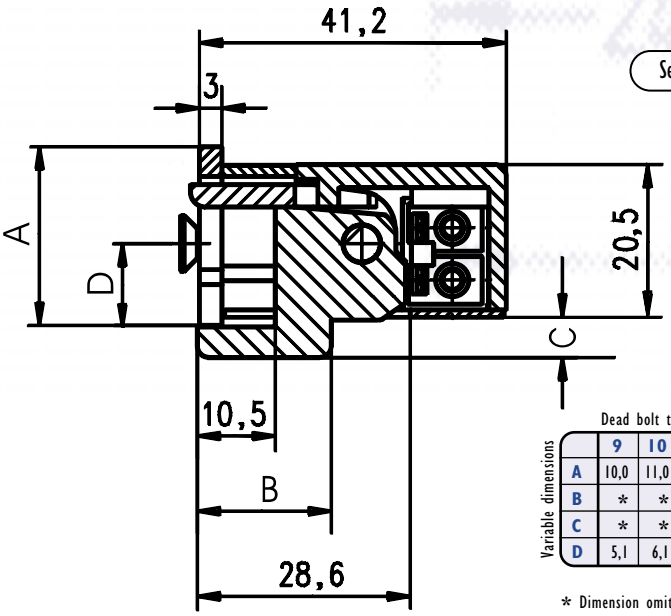

Sectional drawing 1:1

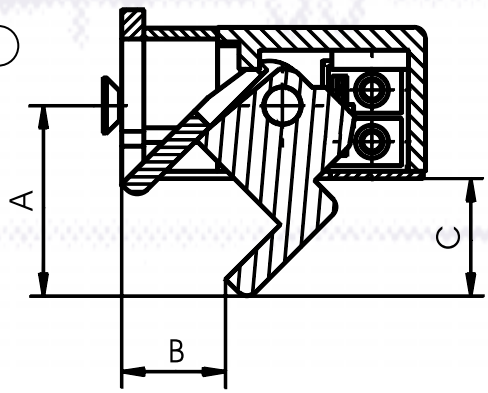

Dead bolt thickness

Variable dimensions	9	10	12	15
A	10,0	11,0	13,0	16,1
B	*	*	18,0	18,0
C	*	*	3,0	5,4
D	5,1	6,1	8,1	11,2

* Dimension omitted, as keep is flush.

Dead bolt thickness

Variable dimensions	9	10	12	15
A	22,3	22,3	24,1	25,8
B	10,6	10,7	11,9	14,1
C	12,4	14,2	14,2	15,9

Specifications	
Standard break-in resistance	3700 N
Material: Housing/keep standard	Die cast zinc/nickel-plated brass
Operating temperature range	-15 °C to +40 °C
Mounting independent of position	Yes
Dead bolt penetration max.	10 mm
Dead bolt height max.	40 mm

Electrical data At 20 °C Model series: 9014, 9034 Coil type		Operating voltage Tolerance range	Rated resistance in Ohm	AC current consumption in mA	DC current consumption in mA (50% Residual ripple)	DC current consumption in mA (stabilized)	Operating noise during AC operation*	Operating noise during DC operation* (50% Residual ripple)	Keep pre-load max. in N with AC	Keep pre-load max. in N with DC (50% Residual ripple)	Keep pre-load max. in N with DC (stabilized)
6-12 (6-V operation)	D1	as specified 7,7	550	740	780	5	I	60	10	10	
6-12 (12 -V operation)	D1	as specified 7,7	1100	1480	1560	4	I	90	20	10	
8-16 V (8 -V operation)	R1	as specified 16,5	350	470	485	5	I	80	10	10	
8-16 V (12 -V operation)	R1	as specified 16,5	500	710	725	4	I	60	10	10	
8-16 V (16 -V operation)	R1	as specified 16,5	700	940	970	4	I	60	20	10	
12 V eE	E3	±1 V	60,0	130	190	200	4	0	20	10	10
24 V eE	F3	±2 V	230,0	70	100	105	3	0	20	10	10
12 V fail-unlocked 3-type	E9	±1 V	62,0	–	185	195	3	0	–	–	–
24 V fail-unlocked 3-type	F9	±2 V	230,0	–	100	105	3	0	–	–	–

*For operating noise, see diagram page 235. Explanation of technical data page 234.

Order data, model series 9014, 9034, 9014RR, 9034RR								**Order number** = blue area			
Model		**For dead bolt thickness**		**Striking plate**		**Colour**		**Voltage**		**DIN orientation**	
Digits 1 - 7				Digits 8 - 10		Digits 11 + 12		Digits 13 + 14		Digit 15	
9014	9014	9	9	150 mm lang	128	grey	02	6-12 V	D1	UNI	I
9034	9034	10	10					8-16 V	R1		
901405	90145	12	12					12 V eE	E3		
903405	90345	15	15					24 V eE	F3		
9014RR	9016							12V Intercom (9034)	E9		
9034RR	9036							24V Intercom (9034)	E9	For indication of the DIN orientation, please note the striking plate table and the selected striking plate.	
901405RR	90165							only specify 12 or 24 V fail unlocked with model 9034, 90345 and 90365.			
903405RR	90365										

The first 7 digits can vary for special models. Please enquire with us regarding the designation for special models.

9034 = Fail-unlocked strike 9014 = Fail-locked strike

Transfer number to **order fax sheet on page 242.**

- Specially designed keep for use with dead bolts
- When the door is open, in contrast to the use of standard strikes, the keep is hinged open and so in position to accept the dead bolt.
- When the door is closed, the keep is moved into the closed position by the dead bolt.
- When no electrical current is applied, in fail locked types the strike is immediately locked.
- With fail unlocked types, the function is additionally controlled by a safety bolt.
- Only when the safety bolt is actuated by the dead bolt can locking take place. Unintentional locking when the door is open is thus reliably prevented.
- In versions with monitoring contact, a dead bolt penetration of at least 7 mm is necessary to ensure reliable actuation of the monitoring contact.

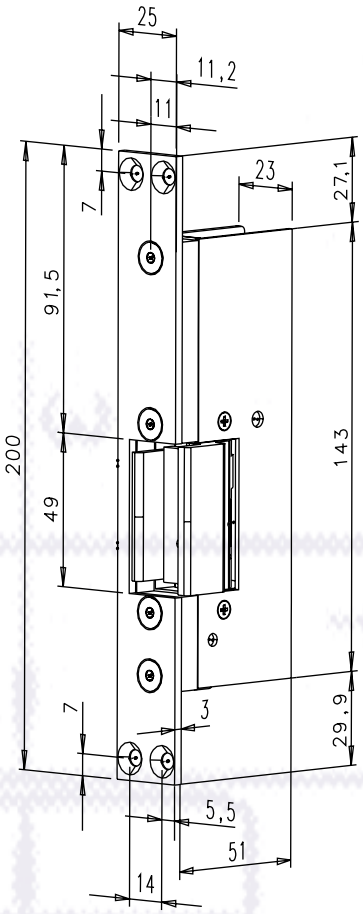

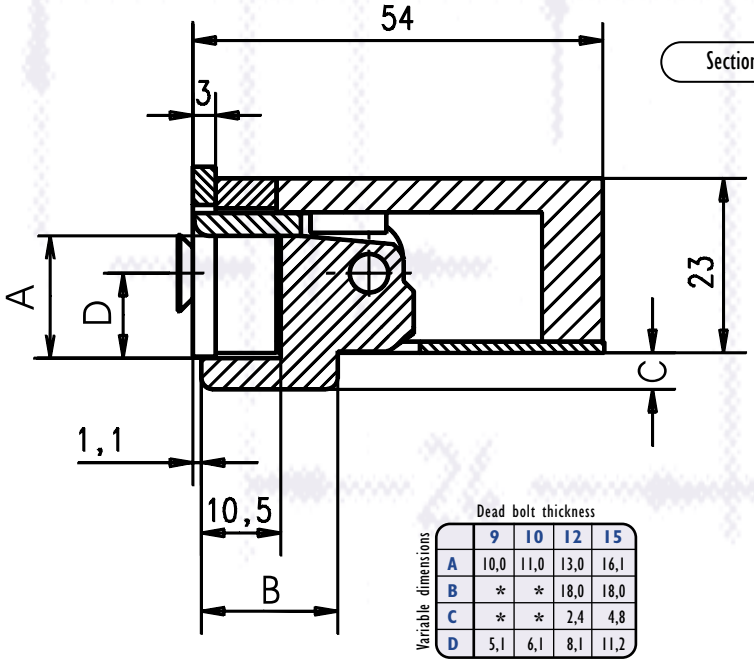

Sectional drawing 1:1

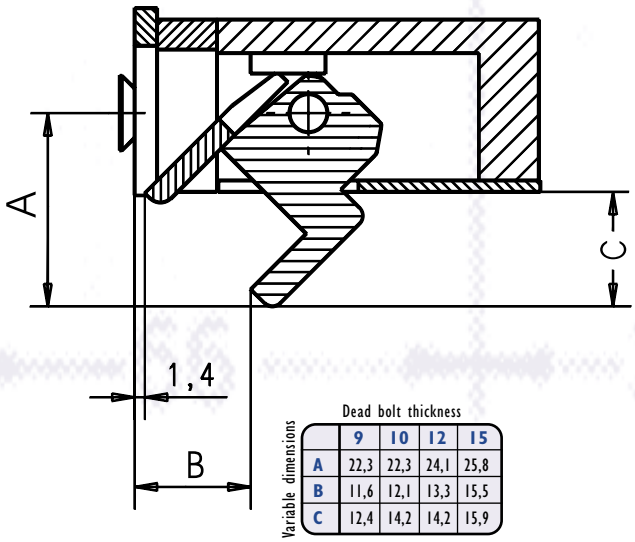

Variable dimensions

	Dead bolt thickness			
	9	10	12	15
A	10,0	11,0	13,0	16,1
B	*	*	18,0	18,0
C	*	*	2,4	4,8
D	5,1	6,1	8,1	11,2

Variable dimensions

	Dead bolt thickness			
	9	10	12	15
A	22,3	22,3	24,1	25,8
B	11,6	12,1	13,3	15,5
C	12,4	14,2	14,2	15,9

* Dimension omitted, as keep is flush

Specifications	
Standard break-in resistance	6000 N
Material: Housing/keep standard	Precision cast steel/nickel-plated brass
Operating temperature range	-15 °C to +40° C
Mounting independent of position	Yes
Dead bolt penetration max.	10 mm
Dead bolt height max.	40 mm

Electrical data At 20 °C Model series: 90141, 90341, 90146, 90346 Coil type		Operating voltage Tolerance range	Rated resistance in Ohm	AC current consumption in mA	DC current consumption in mA (50% Residual ripple)	DC current consumption in mA (stabilized)	Operating noise during AC operation*	Operating noise during DC operation* (50% Residual ripple)	Keep pre-load max. in N with AC	Keep pre-load max. in N with DC (50% Residual ripple)	Keep pre-load max. in N with DC (stabilized)
8-12 V (8-V operation)	D1	as specified 6,2	490	1260	1300	4	1	100	40	10	
8-12 V (12-V operation)	D1	as specified 6,2	850	1850	1950	4	1	100	40	10	
12 V eE	E3	±1 V	30,0	250	390	400	0	0	30	20	0
24 V eE	F3	±2 V	102,0	90	230	240	0	0	30	20	0
12 V fail-unlocked 3-type	E9	±1 V	30,0	–	390	400	0	0	0	0	0
24 V fail-unlocked 3-type	F9	±2 V	102,0	–	230	240	0	0	0	0	0

*For operating noise, see diagram page 235. Explanation of technical data page 234.

Order data, model series 90141, 90146 — **Order number** = blue area

Model		For dead bolt thickness		Striking plate		Colour		Voltage		DIN orientation	
Digits 1 - 7				Digits 8 - 10		Digits 11 + 12		Digits 13 + 14		Digit 15	
90141	90141	9	9	K1	129	grey	02	8-12 V	D1	DL	4
90141RR	90146	10	10					12 V eE	E3	DR	5
		12	12					24 V eE	F3		
		15	15								

Transfer number to **order fax sheet on page 242.**

Order data, model series 90341, 90346 — **Order number** = blue area

Model		For dead bolt thickness		Striking plate		Colour		Voltage		DIN orientation	
Digits 1 - 7				Digits 8 - 10		Digits 11 + 12		Digits 13 + 14		Digit 15	
90341	90341	9	9	200 mm long	119	grey	02	12V Intercom	E9	DL	4
90341RR	90346	10	10					24V Intercom	F9	DR	5
		12	12							For indication of the DIN orientation, please note the striking plate table and the selected striking plate.	
		15	15								

The first 7 digits can vary for special models. Please enquire with us regarding the designation for special models.

Transfer number to **order fax sheet on page 242.**

The sliding door strike and the hook catch-type lock are designed to be used together. If different hook catch-type locks are used, the following points must be observed:

- The point of rotation of the hook catch must be low-lying.
- The hook catch must be capable of easy upward movement.
- The hook catch must not be lockable. The only function of the profile cylinder is to move the hook catch upwards.
- Adjustments may only be made to the hook catch and not to the keep.

Sliding door strikes are water-resistant and so suitable for use in outdoor applications. As an accessory in constructions which have no overhanging roof and offer no protection against direct rain and snow, the heating foil (page 67) offers a reliable protection against the keep freezing solid.

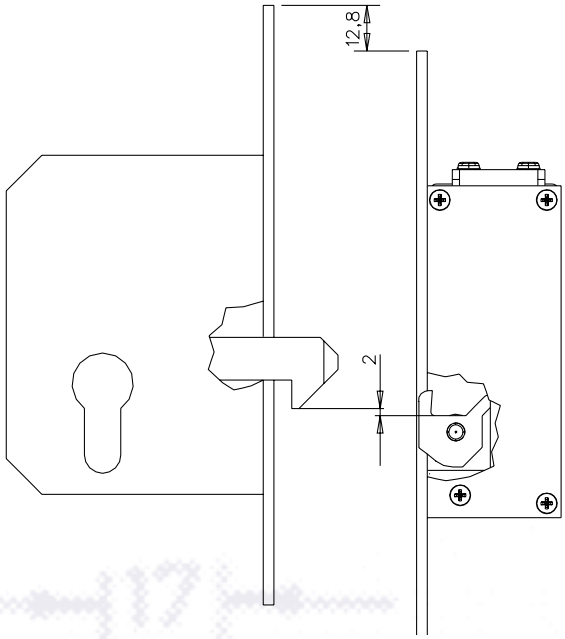

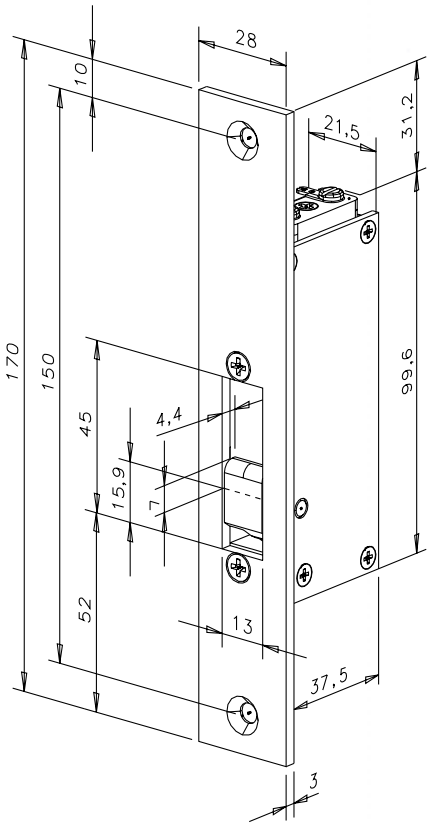

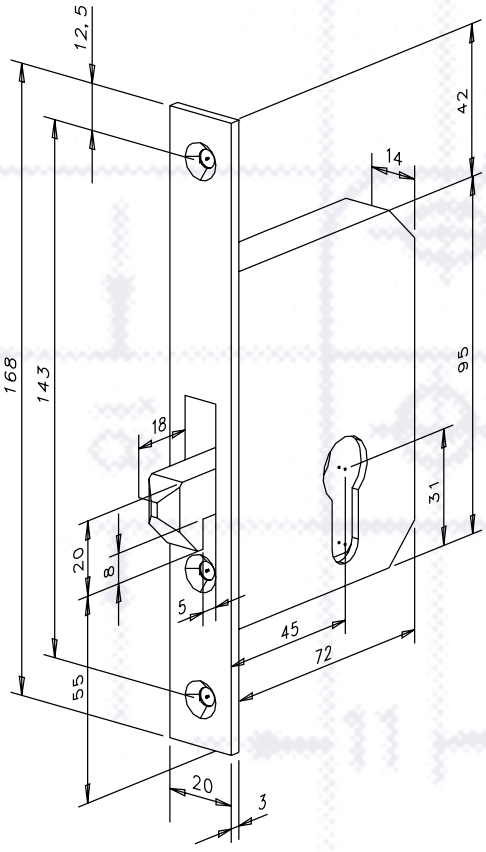

Specifications	
Standard break-in resistance	3000 N
Material: Housing/keep standard	die-cast zinc/brass
Operating temperature range	-15 °C to +40 °C

Electrical data at 20 °C Model series: 112/222/312 Coil type		Operating voltage Tolerance range	Rated resistance in Ohm	AC current consumption in mA	DC current consumption in mA (50% Residual ripple)	DC current consumption in mA (stabilized)	BOperating noise during AC operation*	Operating noise during DC operation* (50% Residual ripple)	Keep pre-load max. in N with AC	Keep pre-load max. in N with DC (50% Residual ripple)	Keep pre-load max. in N with DC (stabilized)
6-12 V (6-V operation)	D1	as specified	7,7	550	740	780	4	0	10	10	10
6-12 V (12-V operation)	D1	as specified	7,7	1100	1480	1560	4	0	160	20	10
8-16 V (8-V operation)	R1	as specified	16,5	350	470	485	3	0	100	10	10
8-16 V (12-V operation)	R1	as specified	16,5	500	710	725	4	1	160	20	10
8-16 V (16-V operation)	R1	as specified	16,5	700	940	970	4	0	160	30	10
12 V Intercom	E5	±1,8 V	30,0	300	390	400	4	0	50	20	10
12 V eE	E3	±1 V	61,0	125	195	200	3	0	10	10	10
24 V eE	F3	±2 V	230,0	70	100	105	4	0	10	10	10
12 V Fail-unlocked	E9	±1 V	62,0	–	190	195	–	0	10	10	10
24 V Fail-unlocked	F9	±2 V	210,0	–	110	115	–	0	10	10	10

*For operating noise, see diagram page 235. Explanation of technical data page 234.

Order data sliding door strike model series 112/222/312					Order number = blue area			
Plus the matching hook catch	Description	Model	Striking plate	Colour Design	Voltage		DIN orientation	
	Digits 1 - 12				Digits 13 + 14		Digit 15	
1112--------00	Fail locked function	112----11440			6-12 V	D1	UNI	I
	Fail locked function	11205--11440			8-16 V	R1		
					12 V Intercom	E5		
	Fail unlocked function	312----11440			12 V eE	E3		
	Fail unlocked function	31205--11440			24 V eE	F3		
					12 V (312)	E9		
					24 V (312)	F9		
1222--------00	Fail locked function	112RR--13535						
	Fail locked/Holding function	222----39740						
	Fail locked/Holding function	22205--13535						
	Fail unlocked function	31205RR 13535						

*112 = Fail locked function 222 = Holding function 312 = Fail unlocked function

Transfer number to order fax sheet on page 242.

The sliding door strike and the hook catch-type lock are designed to be used together. If different hook catch-type locks are used, the following points must be observed:

- The point of rotation of the hook catch must be low-lying.
- The hook catch must be capable of easy upward movement.
- The hook catch must not be lockable. The only function of the profile cylinder is to move the hook catch upwards.
- Adjustments may only be made to the hook catch and not to the keep.

Sliding door strikes are water-resistant and so suitable for use in outdoor applications. As an accessory in constructions which have no overhanging roof and offer no protection against direct rain and snow, the heating foil (page 67) offers a reliable protection against the keep freezing solid.

Mounting position of the keep relative to the hook catch as for model series 112 (2 mm).

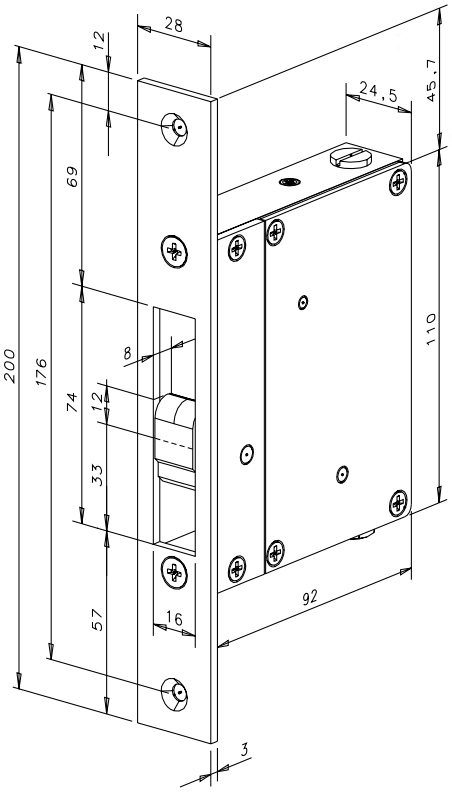

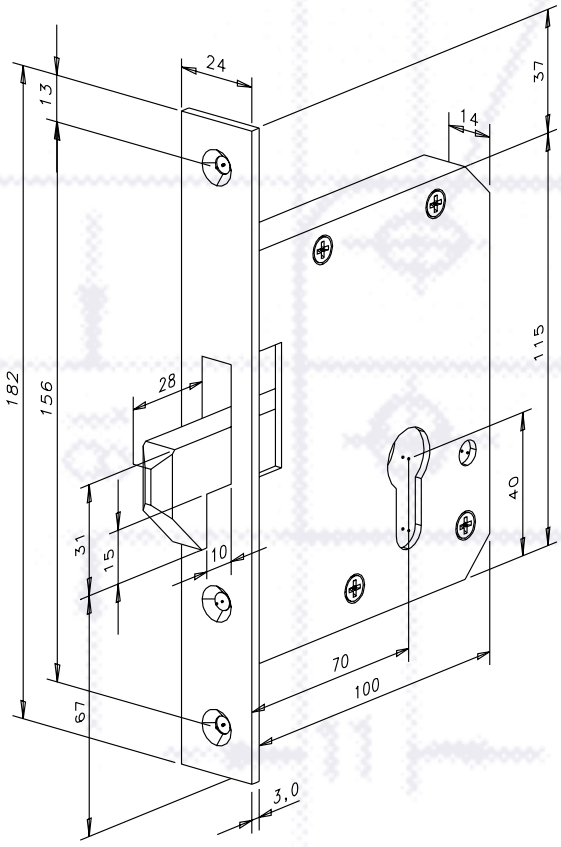

Specifications	
Standard break-in resistance	8000 N
Material: Housing/keep standard	Red brass R65/GS-15CrNi6
Operating temperature range	-15 °C to +40 °C

Electrical data at 20 °C Model series: 110/220/310 Coil type		Operating voltage Tolerance range	Rated resistance in Ohm	AC current consumption in mA	DC current consumption in mA (50% Residual ripple)	DC current consumption in mA (stabilized)	Operating noise during AC operation*	Operating noise during DC operation* (50% Residual ripple)
8-16 V (8-V operation)	R1	as specified	6,9	800	1100	1150	5	0
8-16 V (12-V operation)	R1	as specified	6,9	1100	1650	1750	5	0
8-16 V (16-V operation)	R1	as specified	6,9	1750	200	2320	4	0
12 V eE	E3	±1 V	75,0	120	157	160	4	1
24 V eE	F3	±2 V	202,0	80	116	120	4	0
Fail unlocked 12 V	E9	±1 V	55,0	–	210	220	–	0
Fail unlocked 24 V	F9	±2 V	146,0	–	158	165	–	0

*For operating noise, see diagram page 235. Explanation of technical data page 234.

Order data sliding door strike model series 110/220/310 — **Order number** = blue area

Plus the matching hook catch	Description	Model	Striking plate	Colour Design	Voltage		DIN orientation	
	Digits 1 - 12				Digits 13 + 14		Digit 15	
	Fail locked	110----11240			8-16 V	D1	UNI	1
1110-----00	Fail unlocked	310----11440			12 V eE	E3		
	Fail locked	11005--11240			24 V eE	F3		
	Fail unlocked	31005--11240			Fail unlocked 12 V (310)	E9		
					Fail unlocked 24 V (310)	F9		
	Fail locked	110RR--11840			only specify 12 or 24 V fail unlocked with model 31031005 and 31005RR.			
	Fail unlocked	31005RR11840						
	Fail locked/Holding function	220----11840						
	Fail locked/Holding function	22005--11840						

*110= Fail locked function 220= Holding function 310= Fail unlocked function

Transfer number to order fax sheet on page 242.

- Coordinated for use with effeff escape route systems with system approval and test certificate.
- The locking prism is held in the locking position by means of spring power. When closing the door, the prism latches into the striking plate.
- Application of current to the stroke arrests the prism and the door is locked.
- In models with integrated door contact, activation of the locking function can be restricted to the "Door shut" status, controlled via the door contact.
- The integrated armature contact (25V/1 A) can be used for electronic monitoring of the locking status.
- System requirement: Swing door closer with adjustable closing power and closing speed for reliable positioning of the door leaf in the ready-to-lock status.
- Keep pre-load max. N (Newton): 5000 N
- Break-in resistance in N (Newton): 5000 N
- Connection slit at door contact 250 mm long
- Mounting distance between face plate and striking plate 3 mm (min. 2 mm, max. 4.5 mm)

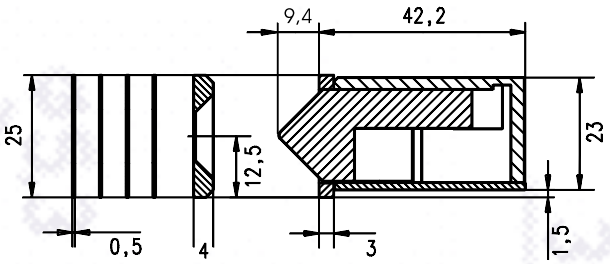

Model:
351AKRR

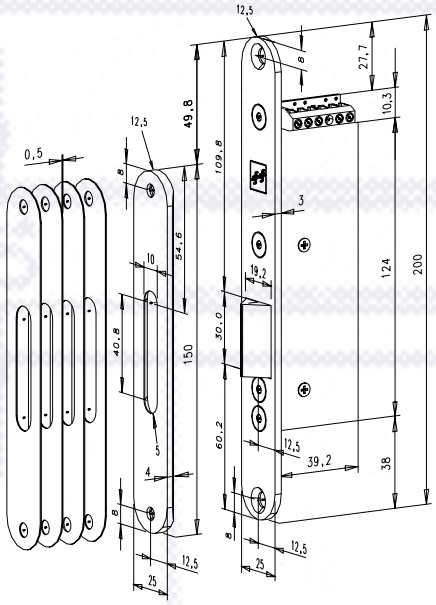

Model:
351RRAKRR

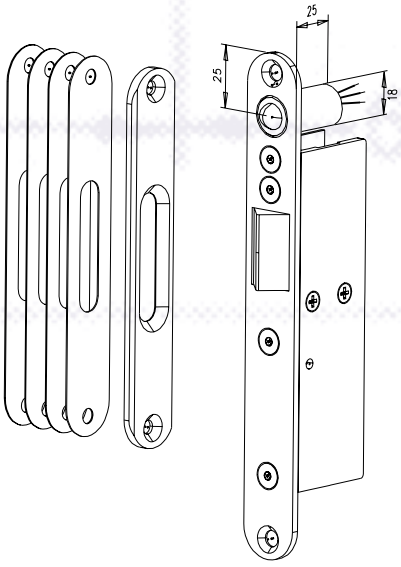

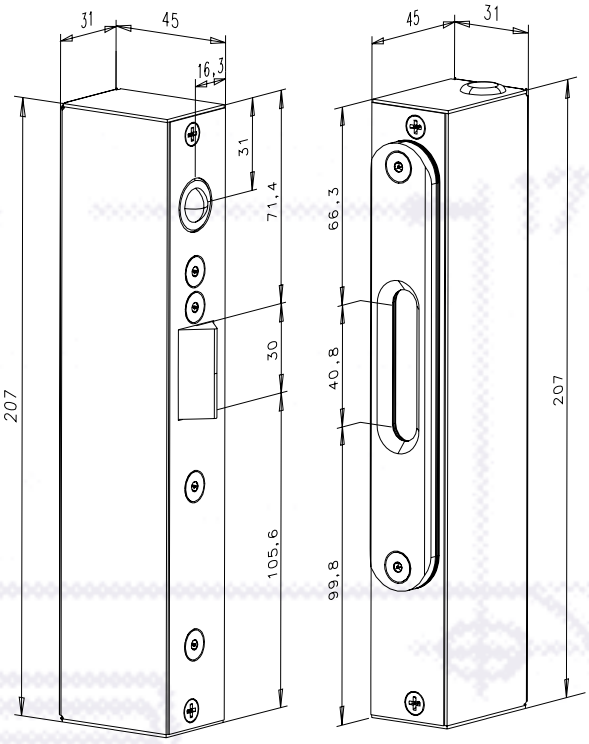

Electrical data at 20 °C Model series: 351		Operating voltage Tolerance range	Rated resistance in Ohm	DC current consumption in mA (stabilized)
12 V DC	E9	±1 V	37,0	320
24 V DC	F9	±2 V	150,0	160

Order data Model series 351				**Order number** = blue area			
Description	**Model**	**Striking plate**	**Colour**	**Voltage**		**DIN orientation**	
Digits 1 - 12				Digits 13 + 14		Digit 15	
With armature contact and mating component	351.66-06135			12 V	E9	UNI	I
With armature contact, door contact and mating component	351.66-80135			24 V	F9		
With armature contact, door contact, mating component in							
surface-m. housing	351.66-A0502						
Without striking plate and mating component	351.66-----						
Screw-mounted housing loose with mating component	----A0502-01						

Transfer number to order fax sheet on page 242.

For use in potentially explosive atmospheres, e.g. in

- Laboratories
- Chemical firms
- Mills
- Paintshops

The tried and tested effeff high-security strike for fire doors model 142 is now available in a pneumatic version, model 142.380 for mounting in fire doors for potentially explosive atmospheres. Model 142.380 is suitable for mounting in fire doors and has been tested accordingly by the Materials Testing Agency MPA Dortmund. Test certificate no. 12 0389 096. See also electric strikes for fire doors from page 68. This model operates according to the "fail locked" principle. Fields of application include laboratories, chemical firms, mills, paintshops etc. Model 1422.380 was specially developed for horizontal installation.

Model:
142.381

Model:
142.380

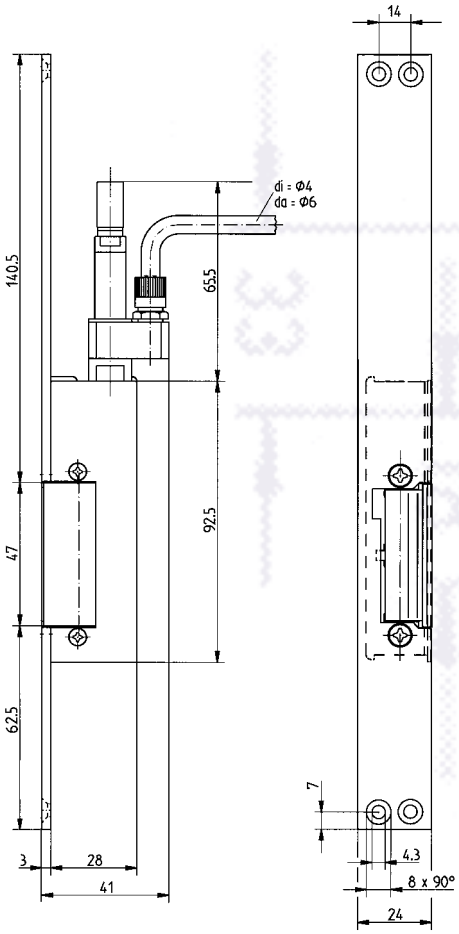

Striking plates: from page 123 ➔➔

Specifications	
Working pressure	2 to 8 bar
Mounting position	vertical (for horizontal mounting model 1422.380)
Compressive strength against attempted break-in	10000 N

Order data model series 142.380 pneumatically controlled — **Order number** = blue area

Model	Design	Striking plate	Colour	Voltage	DIN orientation
Digits 1 - 7		Digits 8 - 10	Digits 11 + 12	Digits 13 + 14	Digit 15
142P DL	142.380				DL 4
142P DR	142.381				DR 5
		HZ 038	EST 35		
		IW 066	galvanized 40		
			grey 02		
			gold 01		
142P DL for horizontal mounting	1422380	Other striking plates from page 123.	For possible colours, see page 236.		DL 4
142P DR for horizontal mounting	1422381				DR 5

Transfer number to order fax sheet on page 242.

- For use with heavy-duty industrial doors
- Utilization in penal institutes
- Suitable for external use
- Latch bolt penetration 16 mm

High-security strikes are water-resistant and so suitable for external use. As an accessory in constructions without overhanging roof which offer no protection against direct rain and snow, the heating foil (page 67) provides reliable protection against the keep freezing solid.

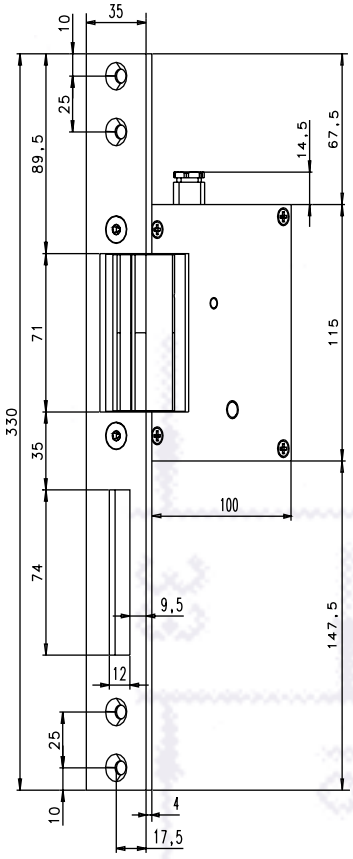

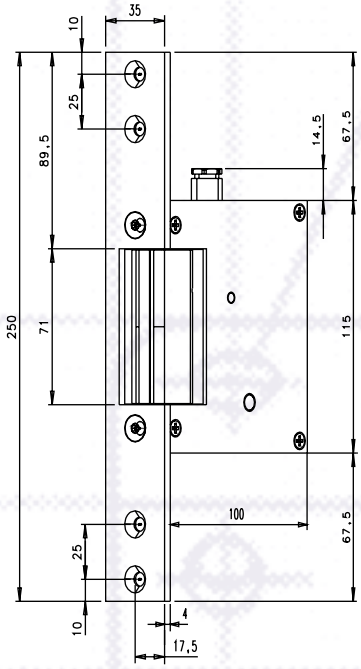

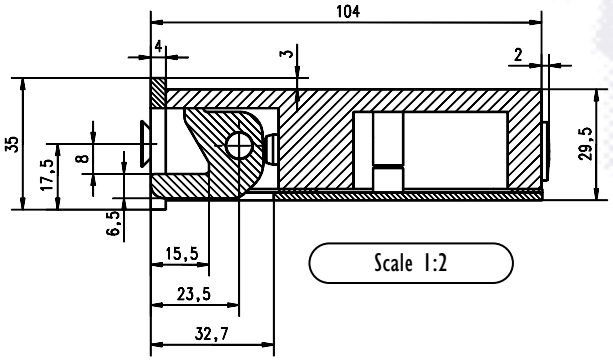

Scale 1:2

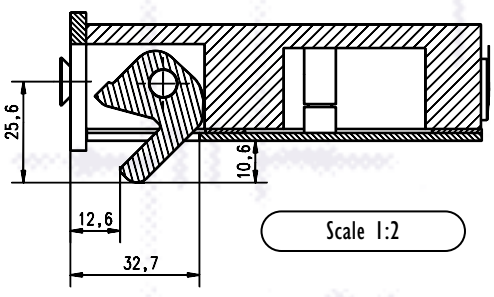

Scale 1:2

Specifications	
Standard break-in resistance	10000 N
Operating temperature range	-15 °C to +40 °C
Mounting independent of position	Yes

Electrical data At 20 °C Model series: 102 Coil type		Operating voltage Tolerance range	Rated resistance in Ohm	AC current consumption in mA	DC current consumption in mA (50% Residual ripple)	DC current consumption in mA (stabilized)	Operating noise during AC operation*	Operating noise during DC operation* (50% Residual ripple)
12 V AC	E6	±1,8 V	6,8	650	1700	1760	5	1
24 V AC	F6	±3,6 V	14,0	590	1650	1710	5	1
12 V 100% ED	E4	±1 V	35,3	–	335	340	4	0
24 V 100% ED	F4	±2 V	102,3	–	232	235	4	0

*For operating noise, see diagram page 235. Explanation of technical data page 234.

Order data model series 102, 20, 320							Order number = blue area			
Model		Mechanical unlocking		Striking plate		Colour		Voltage		DIN orientation	
Digits 1 - 7				Digits 8 - 10		Digits 11 + 12		Digits 13 + 14		Digit 15	
102		RR	RR	HZ	023	galvanized	40	12 V AC	E6	UNI with SBL 110	1
202				KL	110			24 V AC	F6	DL with SBL 023	4
302								12 V 100% ED	E4	DR with SBL 023	5
								24 V 100% ED	F4		
								only specify 12 or 24 V fail unlocked with model 302/302RR.	E9		
									F9		

Transfer number to order fax sheet on page 242.

- For use with heavy-duty industrial doors
- Utilization in penal institutes
- Suitable for external use
- For latch bolt (H x W x L) 65 x 18 x 21 mm max. latch bolt throw from striking plate 19.5 mm

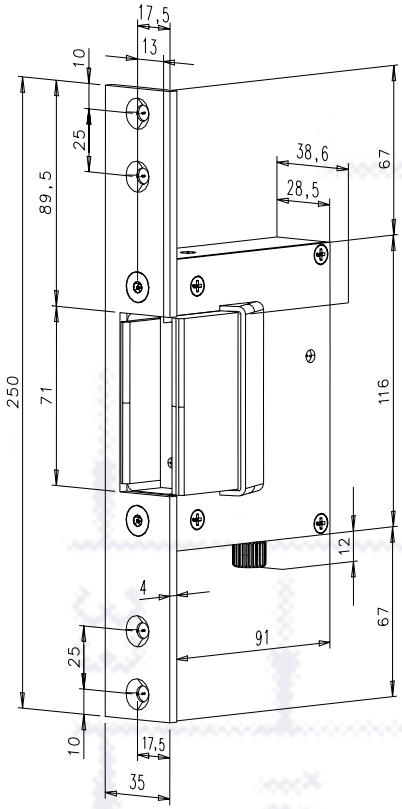

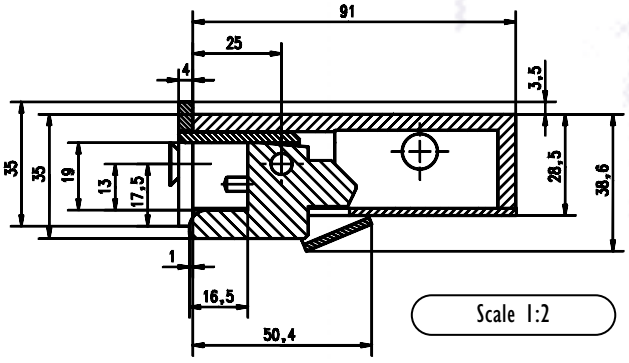

Scale 1:2

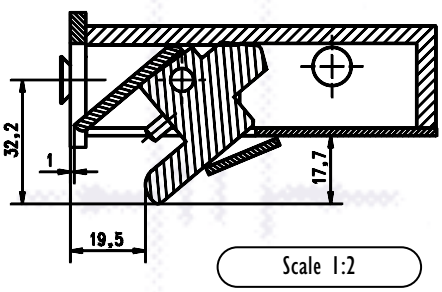

Scale 1:2

Specifications	
Standard break-in resistance	15000 N
Operating temperature range	-15 °C to +40 °C
Mounting independent of position	Yes

Electrical data at 20 °C Model series: 102 Coil type		Operating voltage Tolerance range	Rated resistance in Ohm	AC current consumption in mA	DC current consumption in mA (50% Residual ripple)	DC current consumption in mA (stabilized)	Operating noise during AC operation*	Operating noise during DC operation* (50% Residual ripple)
12 V AC	E6	±1,8 V	6,8	650	1700	1760	5	1
24 V AC	F6	±3,6 V	14,0	590	1650	1710	5	1
12 V 100% ED	E4	±1 V	35,3	–	335	340	4	0
24 V 100% ED	F4	±2 V	102,3	–	232	235	4	0

*For operating noise, see diagram page 235. Explanation of technical data page 234.

Order data model series 9102		Order number = blue area			
Description	**Model**	**Voltage**		**DIN orientation**	
	Digits 1 - 12	Digits 13 + 14		Digit 15	
Standard	9102--------	12 V AC	E6	UNI	1
Standard with monitoring contact	9102RR------	24 V AC	F6		
Standard with monitoring contact and armature contact	9102RRAKRR--	12 V 100% ED	E4		
With adjustment function FIX and monitoring contact and armature contact	9102RRAKRRF1	24 V 100% ED	F4		

Transfer number to order fax sheet on page 242.

- The main field of application for these strikes is the supplementary electrical locking of wet rooms (WCs) with 2 entrances in hospitals and residential homes. Combined with a bolt switch contact model 878 or 875, when one door is mechanically locked, the opposite door is electrically locked. Interlock functions can be simply implemented using models with monitoring contacts.
- Interlock functions can be simply implemented using models with monitoring contacts.
- The particular benefit of this series is its almost noiseless functional sequence. The snapping noise otherwise customary with strikes when opening the door is omitted due to this special design.
- The mating component is included in the delivery
- For mounting in steel frames, we recommend using the mounting plates SET-LA-M5 (see page 227).

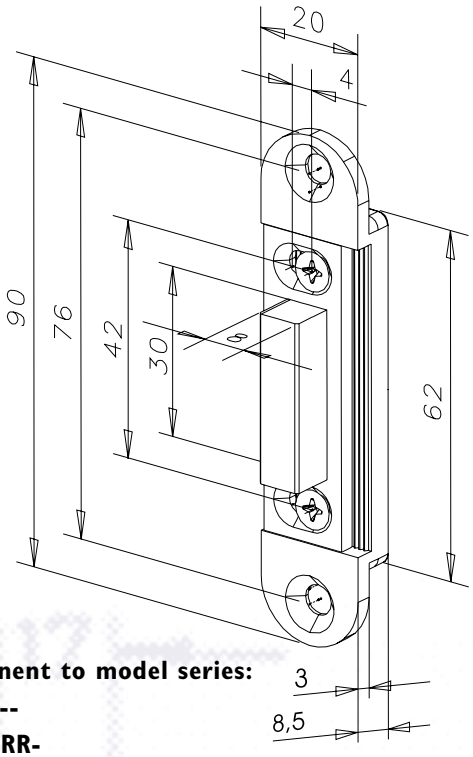

Mating component to model series:
9334---, 9314---
9334RR-, 9314RR-

Order data for 24 V fail unlocked operation. The illustration is also applicable for model series 9314-----.

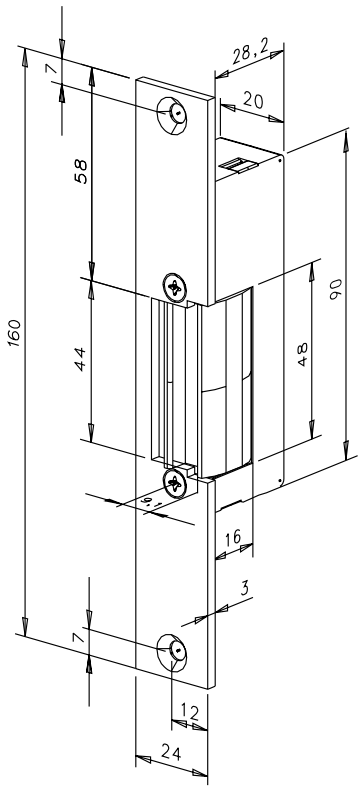

9334---40335F91

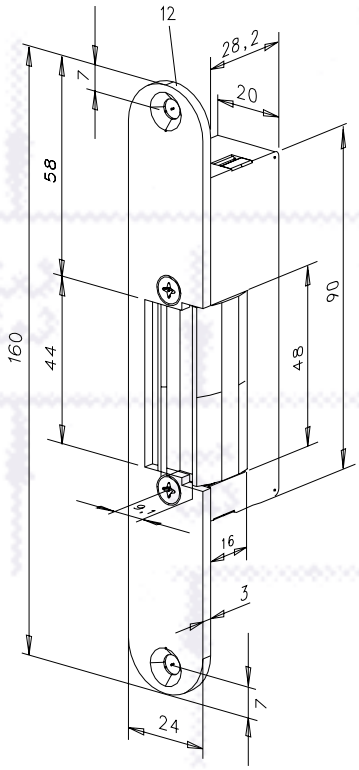

9334---12135F91

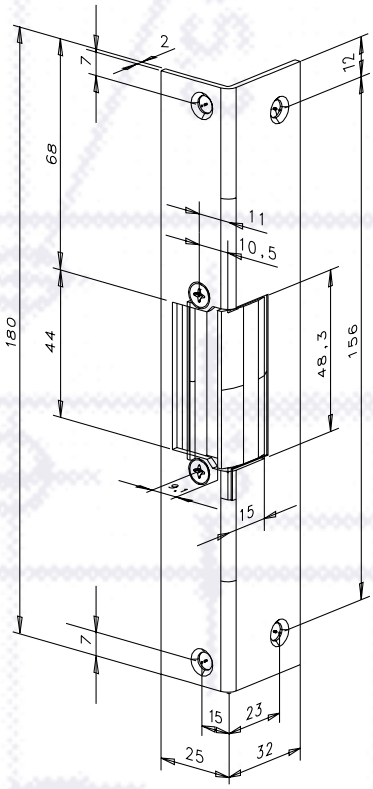

9334---13735F91

Specifications	
Standard break-in resistance	6500 N
Material: Housing/keep standard	Die cast zinc/die cast zinc
Operating temperature range	-15 °C to +40 °C
Mounting independent of position	Yes

Electrical data at 20 °C Model series: 9334/9334RR Coil type		Operating voltage Tolerance range	Rated resistance in Ohm	DC current consumption in mA (50% Residual ripple)	DC current consumption in mA (stabilized)	Operating noise during DC operation* (50% Residual ripple)
Fail unlocked 12 V	E9	±1 V	62	185	195	0
Fail unlocked 24 V	F9	±2 V	200	115	120	0

*For operating noise, see diagram page 235. Explanation of technical data page 234.

Order data model series 9334/9334RR/Fail unlocked						Order number= blue area			
Model	**Design**	**Striking plate**		**Colour**		**Voltage**		**DIN orientation**	
Digits 1 - 7		Digits 8 - 10		Digits 11 - 12		Digits 13 + 14		Digit 15	
	:								
9334	9334---	KL	403	EST	35	Fail unlocked 12 V	E9	UNI	I
9334RR	9334RR-	KL radius	121			Fail unlocked 24 V	F9		
		KiW	137						

→ Transfer number to order fax sheet on page 242.

*The mating component is contained in the delivery.

Special model using fail unlocked principle. Note: As this strike is combined with a mating component, in case of a power failure or if the electrical system fails, it is not possible to open the door. We recommend emergency power supply systems as an energy source (see accessories). Pay attention to the mounting instructions.
http://www.eff.com/sichtechnik/st_index.html

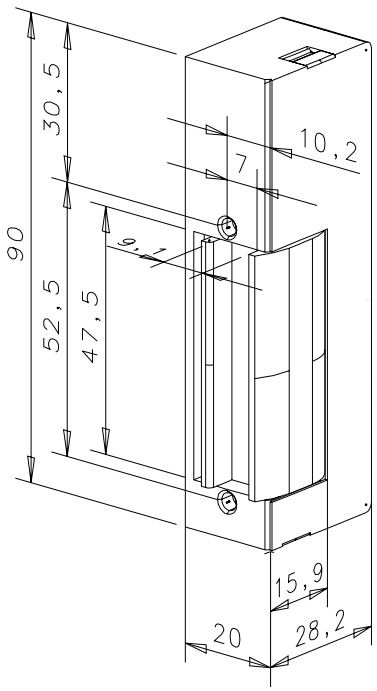

Model:
9334---
9314---

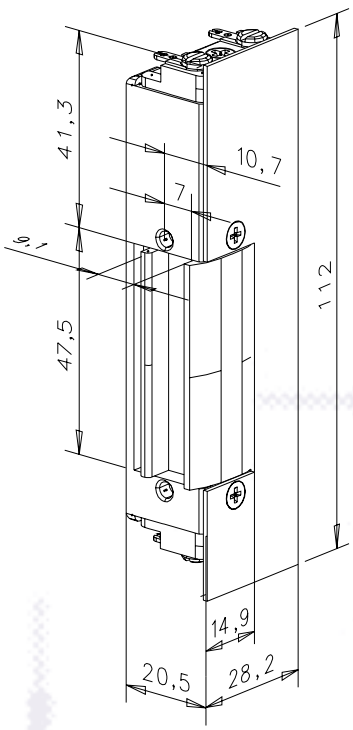

Model:
9334RR-
9314RR-

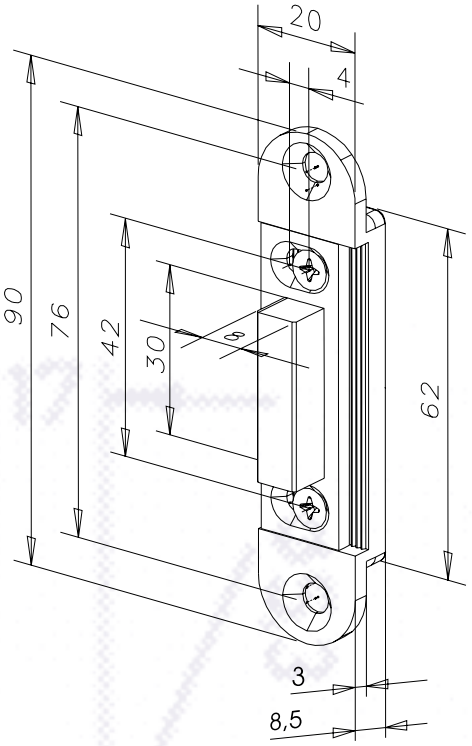

Mating component to model series:
9334---, 9314---
9334RR-, 9314RR-

Specifications	
Standard break-in resistance	6500 N
Material: Housing/keep standard	Die cast zinc/die cast zinc
Operating temperature range	-15 °C to +40 °C
Mounting independent of position	Yes

Electrical data at 20 °C Model series: 9314 Coil type		Operating voltage Tolerance range	Rated resistance in Ohm	AC current consumption in mA	DC current consumption in mA (50% Residual ripple)	DC current consumption in mA (stabilized)	Operating noise during AC operation*	Operating noise during DC operation* (50% Residual ripple)
6-12 V (6-V operation)	D1	as specified	7,7	550	740	780	4	I
6-12 V (12-V operation)	D1	as specified	7,7	1100	1480	1560	4	I
8-16 V (8-V operation)	R1	as specified	16,5	350	470	485	4	I
8-16 V (12-V operation)	R1	as specified	16,5	500	710	725	4	I
8-16 V (16-V operation)	R1	as specified	16,5	700	940	970	4	I
12 V eE	E3	±1 V	60,0	125	190	200	3	0
24 V eE	F3	±2 V	235,0	70	100	102	3	0

*For operating noise, see diagram page 235. Explanation of technical data page 234.

Order data model series 9314/9314RR/Fail locked						Order number = blue area			
Model	**Design**	**Striking plate**		**Colour**		**Voltage**		**DIN orientation**	
Digits 1 - 7		Digits 8 - 10		Digits 11 + 12		Digits 13 + 14		Digit 15	
	:								
9314	9314---	KL	403	EST	35	6-12 V	D1	UNI	I
9314RR	9314RR-	KL radius	121			18-16 V	R1		
		KiW	137			12 V eE	E3		
						24 V eE	F3		

→ Transfer number to order fax sheet on page 242.

*The mating component is contained in the delivery.

Special model using fail unlocked principle. Note: As this strike is combined with a mating component, in case of a power failure or if the electrical system fails, it is not possible to open the door. We recommend emergency power supply systems as an energy source (see accessories). Pay attention to the mounting instructions.
http://www.eff.com/sichtechnik/st_index.html

- Special model with monitoring contact and additional integrated monitoring contact of the locking mechanism. Two contacts reliably monitor the position of the door. The position of the door is monitored (monitoring contact) by engagement of the dead lock bolt in the keep. In addition, by means of a secondary contact monitoring the armature which arrests the strike, the locking status of the keep is monitored.
- Only in the case of a door secured by the strike is the secured status signalled.
- The control desk 7200-20/7200-22 can be used for monitoring and control (see Accessories catalogue).
- The fail unlocked version is recommended as a supplementary locking system with short striking plate and dead bolt 807-10 (see Accessories catalogue). This guarantees a reliable functional sequence without pre-load on the keep.

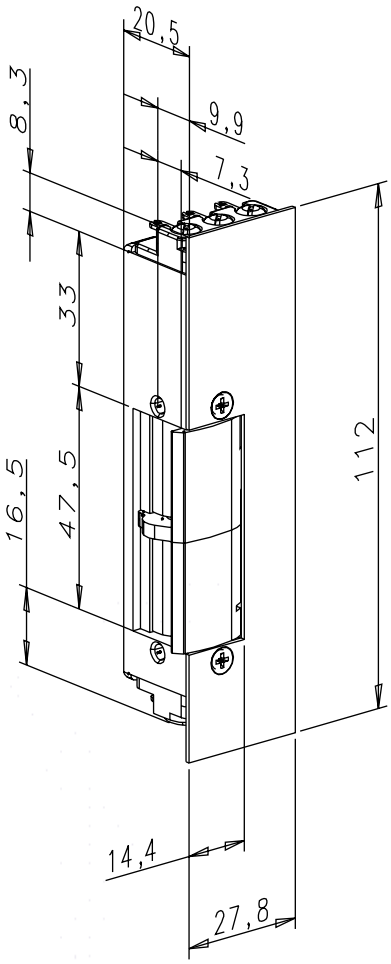

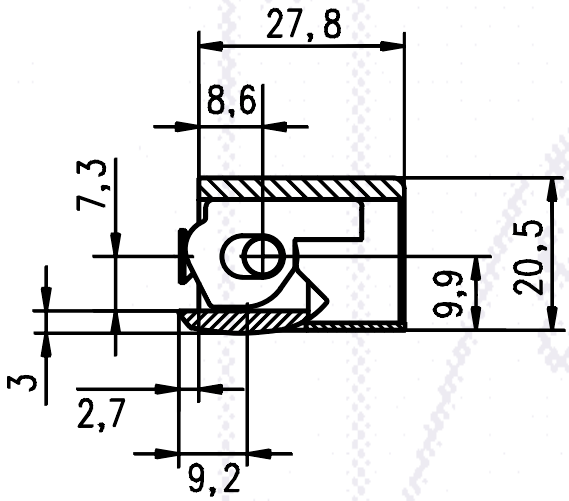

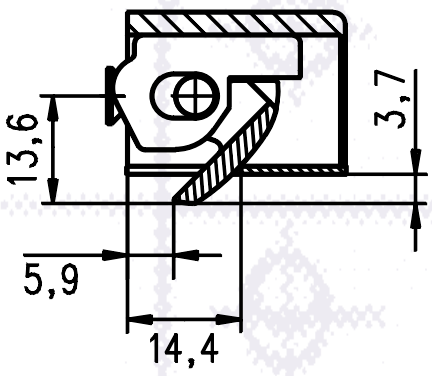

Sectional drawing 1:1

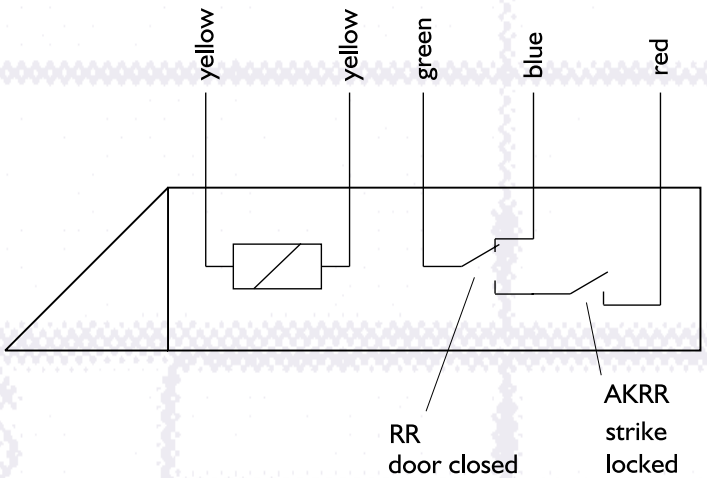

Striking plates: from page 120 ➔➔

Specifications	
Standard break-in resistance	5000 N
Material: Housing/keep standard	Die cast zinc/steel
Operating temperature range	-15 °C to +40 °C
Mounting independent of position	No

Electrical data at 20 °C Model series: 1801, 3801 Coil type		Operating voltage Tolerance range	Rated resistance in Ohm	AC current consumption in mA	DC current consumption in mA (50% Residual ripple)	DC current consumption in mA (stabilized)	Operating noise during DC operation* (50% Residual ripple)	Keep pre-load max. in N with DC (50% Residual ripple)	Keep pre-load max. in N with DC (stabilized)
12 V eE	E3	±1 V	60,0		190	200	0	10	10
24 V eE	F3	±2 V	239,0		100	105	0	10	10
12 V fail-unlocked 3-type	E9	±1 V	62,0		185	195	0	10	10
24 V fail-unlocked 3-type	F9	±2 V	200,0		115	120	0	10	10

*For operating noise, see diagram page 235. Explanation of technical data page 234.

Order data model series 1801RR, 3801RR								Order number = blue area			
Model		Design		Striking plate		Colour		Voltage		DIN orientation	
Digits 1 - 7				Digits 8 - 10		Digits 11 + 12		Digits 13 + 14		Digit 15	
1801	1801	FIX	F--	HZ	283	EST	35	12 V eE	E3	DL	4
3801	3801			IW	066	galvanized	40	24 V eE	F3	DR	5
				KL	120	grey	02	Fail unlocked 12 V (3801)	E9		
				KIW	389	gold	01	Fail unlocked 24 V (3801)	F9		
				Possible combinations are indicated in the striking plate tables.		For possible colours, see page 236.		Only specify 12 or 24 V fail unlocked with model 3801.		For indication of the DIN orientation, please note the striking plate table and the selected striking plate.	

For possible combinations, please see the price list.
Striking plates with keep guide are only supplied with mounted strike.
The keep is adjusted in the factory to the keep guide.

Transfer number to order fax sheet on page 242.

Electric strike for surface-mounted panic door locks with horizontal actuating bar

- Usable for DIN left and DIN right mounting by simply turning 180°.
- Fail locked and fail unlocked version
- Available with monitoring contact. Other electric strike variants for panic door locks are described in brochure ANSI. O.e 2.1901-020 0G0 00

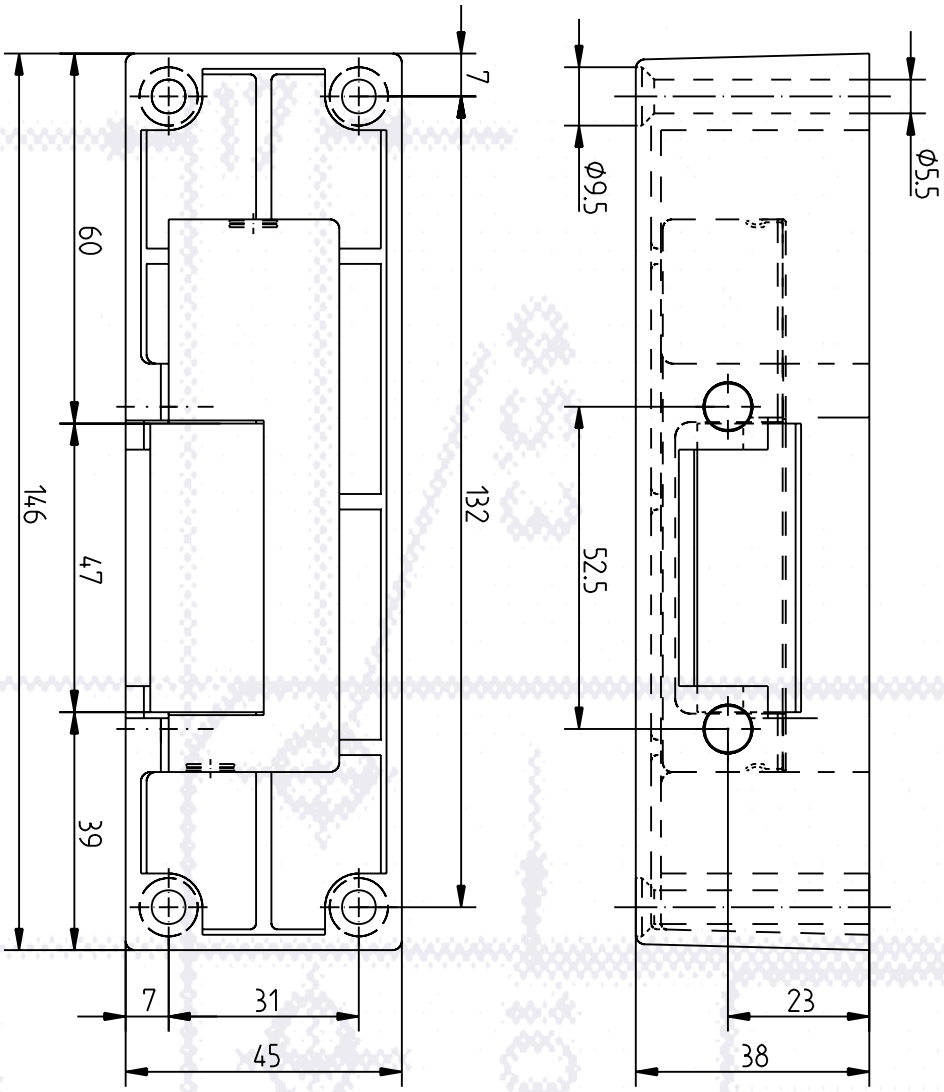

Specifications	
Standard break-in resistance	3000 N
Material: Housing	Powder-coated die-cast zinc
Material: Keep	Coated brass
Operating temperature range	-15 °C to +40 °C
Mounting independent of position	Yes

Electrical data At 20 °C Model series: 14, 24, 34 Coil type		Operating voltage Tolerance range	Rated resistance in Ohm	AC current consumption in mA	DC current consumption in mA (50% Residual ripple)	DC current consumption in mA (stabilized)	Operating noise during AC operation*	Operating noise during DC operation* (50% Residual ripple)
6-12 V (6 -V operation)	D1	as specified	7,7	550	740	780	4	I
6-12 V (12 -V operation)	D1	as specified	7,7	1100	1480	1560	4	I
8-16 V (8 -V operation)	R1	as specified	16,5	350	470	485	4	I
8-16 V (12 -V operation)	R1	as specified	16,5	500	710	725	4	I
8-16 V (16 -V operation)	R1	as specified	16,5	700	940	970	4	I
12 V Intercom	E5	±1,8 V	30,0	290	385	400	3	0
12 V eE	E3	±1 V	60,0	125	190	200	3	0
24 V eE	F3	±2 V	235,0	70	100	102	3	0
12 V fail-unlocked 3-type	E9	±1 V	61,0	–	180	195	–	0
24 V fail-unlocked 3-type	F9	±2 V	230,0	–	100	105	–	0

*For operating noise, see diagram page 235. Explanation of technical data page 234.

Order data model series 14.400, 34.400						Order number = blue area			
Model	**Design**	**Housing**		**Colour**		**Voltage**		**DIN orientation**	
Digits 1 - 7		Digits 8 - 10		Digits 11 + 12		Digits 13 + 14		Digit 15	
14ATP	14.400	–	201	schwarz	05	6-12 V	D1	UNI	I
24ATP	24.400					12 V Intercom	E5		
34ATP	34.400					12 V eE	E3		
14RRATP	14.460					24 V eE	F3		
24RRATP	24.460					Fail unlocked 12 V (34)	E9		
14RRATP	14.460					Fail unlocked 24 V (34)	E9		
1405ATP	14.4005								
3405ATP	34.4005					Only specify 12 or 24 V fail unlocked with model 34.			
1405RRATP	14.4605								
3405RRATP	34.4605								

Transfer number to order fax sheet on page 242.

ANGLED STRIKING PLATES STANDARD

➔ Angled striking plates are designed primarily for wooden constructions, but can also be used for other applications. If electric strikes are retrofitted in angled striking plates, prior to mounting the lateral cover at the strike must be removed. For wooden doors, we recommend using strikes with adjustable keep (FaFix), as the special properties of wood can necessitate adjustment of the keep.

Different sizes and varying positions of the dead bolt aperture permit combination with a wide range of different locks. Model 080 was designed and prepared especially for mounting the effeff bolt switch contact (see accessories catalogue). In the case of striking plates with a radius of 10 mm, the aperture can be easily produced using routers with 10 mm indexable inserts.

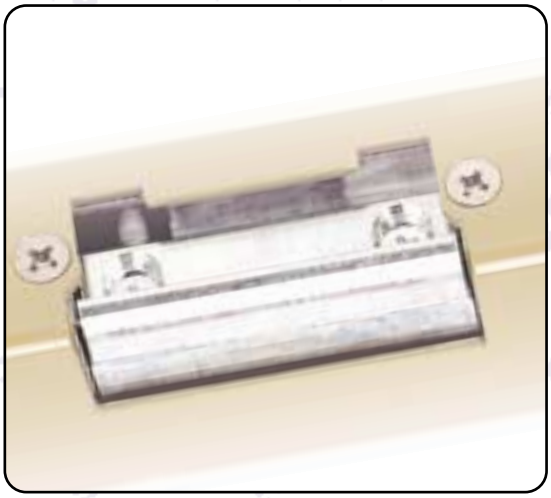

Key

- A Width of the striking plate
- B Distance from the keep aperture to the dead bolt aperture. With KL, kF, KiW, distance from keep aperture to bottom edge of striking plate
- C Height of dead bolt aperture
- D Width of dead bolt aperture
- E Distance from dead bolt aperture to front edge of striking plate
- F Radius at striking plate corners
- H Width of second shank in angled striking plates
- M Dimensions of fixing holes
- P Distance from striking plate fixing hole to front edge of striking plate

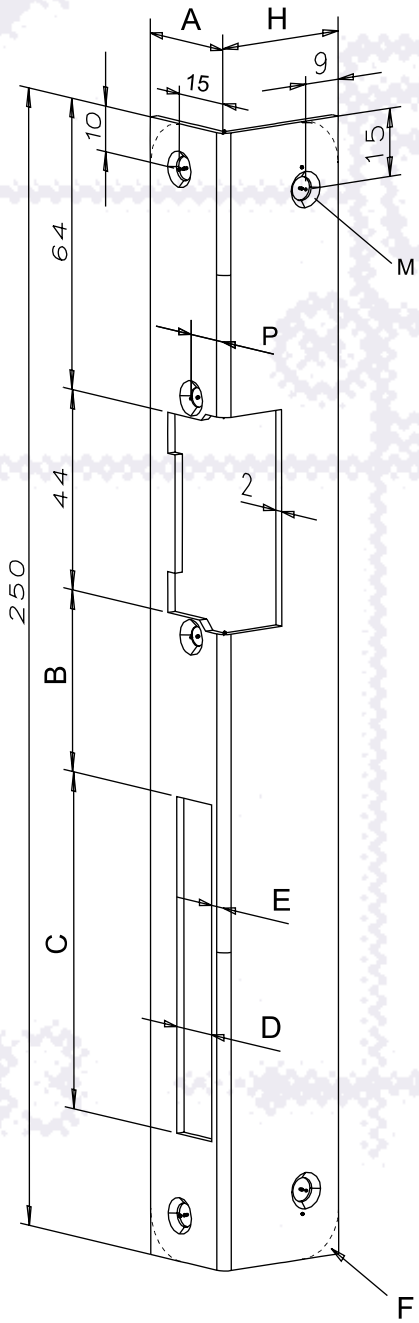

Angled striking plate 324

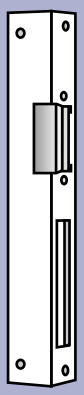

Standard see technical drawing left

	No.		324	067	842	066	272	923	421	077	080	062	063
ORDER DATA	Surface finishes*	Stainless steel	35	35		35	35					35	35
		Galvanized and ground	40			40						40	40
		Polished brass	31	31		31							
		Yellow chromated	41					41	41				
		Gold-coloured	01	01	01	01	01			01	01		
		Grey				02	02						
		Black	05			05	05						
		White	04			04	04						
SPECIFICATIONS	Dimensions	A	25	25	25	25	25	22	22	25	25	25	25
		B	40	40	45	40	40	32	40	---	38	40	40
		C	74	74	50	74	74	74	74	---	47	74	74
		D	12	12	11	12	12	12	12	---	13	12	12
		E	4	7,5	7	4	4	4	4	---	4	4,9	4,9
		F	10	No	10	No	15	10	10	No	No	No	No
		G											
		H	32	32	32	32	32	32	32	32	32	41	41
		I											
		L											
		M	5,3 x 8	5,3 x 8	5,3 x 8	5,3 x 8	5,3 x 8,5	5,3 x 8	5,3 x 8	5,3 x 8	5,3 x 8	5,3 x 8	5,3 x 8
		N											
		O											
		P	11	11	11	11	11	11	11	11	11	12	12
		R											
		S											
		T											
		U											
		V											
		X											
		DIN orientation required	x	x	x	x	x	x	x	x	x	x	x
	Strike model	14 UNI	x	x	x	x	x			x	x	only for 12wd	only for 12wd E
		14 DIN, 14A	x	x	x	x	x			x	x		
		14RR DIN	x	x	x	x	x			x	x		
		17,116 UNI	x	x	x	x	x			x	x		
		17RR, 116RR UNI	x	x	x	x	x			x	x		
		19 UNI						x	x				
		19 DIN, 19A						x	x				
		142 DIN	x	x	x	x	x			x	x		
		142RR DIN	x	x	x	x	x			x	x		
	Special features									Without dead bolt aperture	Prepared for model 878		

* For more **information** on **surface finishes** see from page 236

Order data strike model from page 36 ➔➔

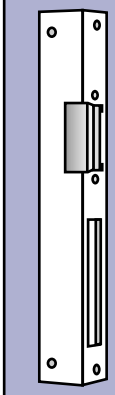

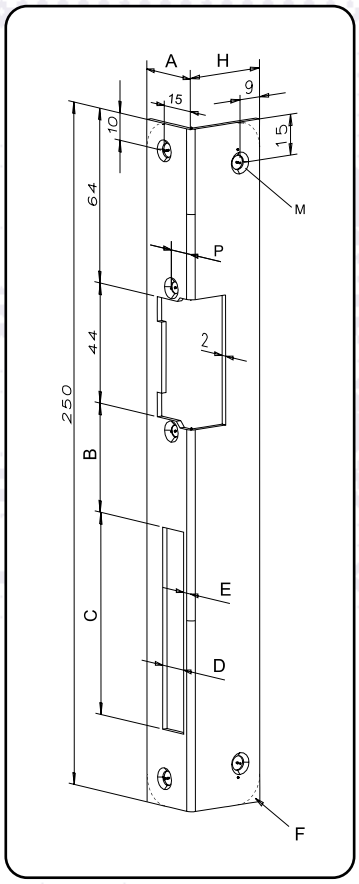

Angled striking plate 324

Open up a special combination.

A material thickness of 3 mm and additional fixing holes offer enhanced security. The striking plates are designed to fit the multiple locking systems of GU and KFV. For strikes with monitoring contact, standard angled striking plates (for example 066) should be used.

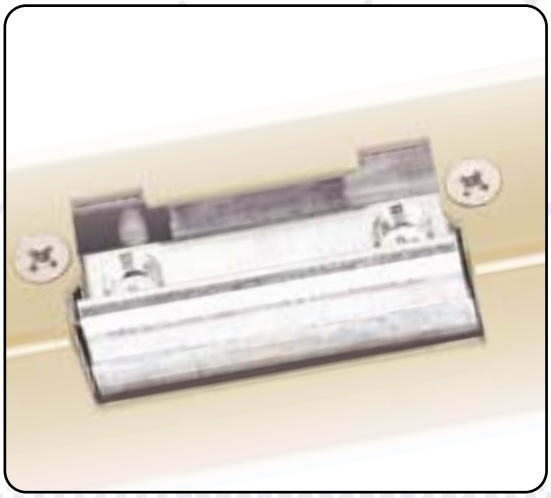

Key

- B Distance from the keep aperture to the dead bolt aperture. With KL, kF, KiW, distance from keep aperture to bottom edge of striking plate
- C Height of dead bolt aperture
- D Width of dead bolt aperture
- E Distance from dead bolt aperture to front edge of striking plate
- G Distance from upper edge of striking plate to dead bolt aperture
- H Width of second shank in angled striking plates (depth)
- M Dimensions of fixing holes
- V In angled striking plates, additional fixing holes

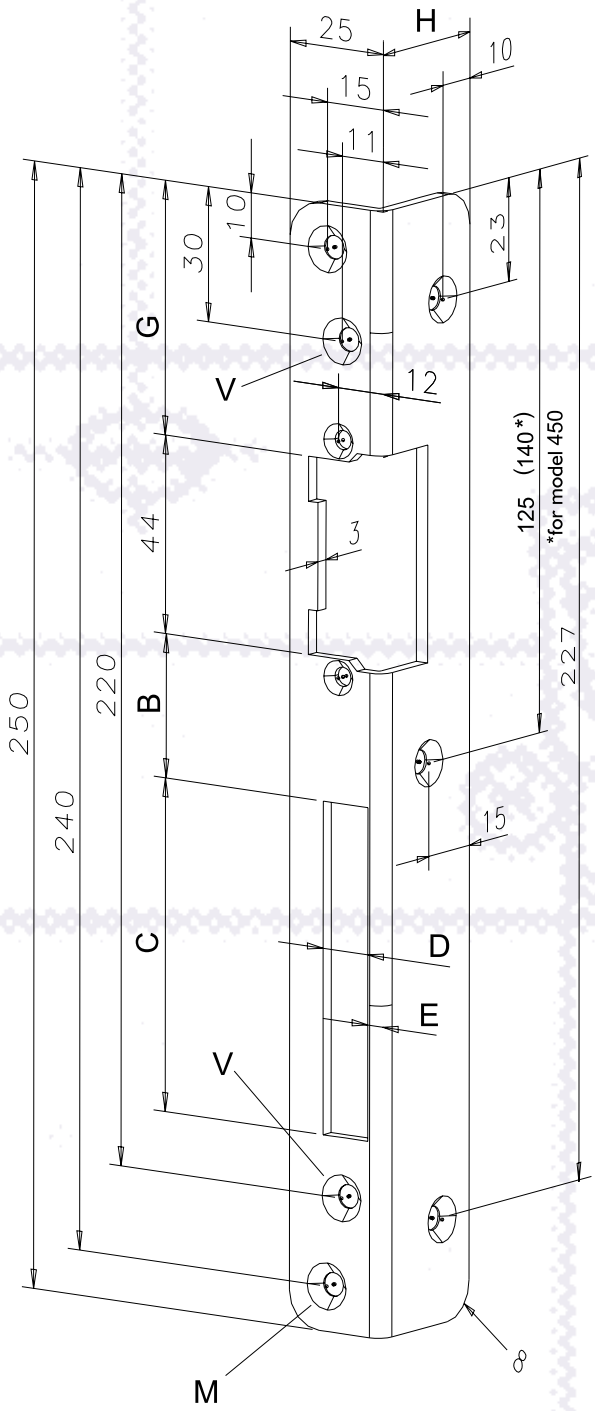

Angled striking plate 277

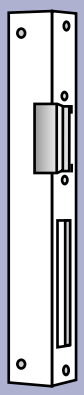

Standard see technical drawing left

	No.		277	069	858	450	278
ORDER DATA	Surface finishes*	Stainless steel	35				35
		Galvanized and ground					
		Polished brass					
		Yellow chromated		41	41	41	
		Gold-coloured		01		01	
		Grey					
		Black		05			
		White		04			
SPECIFICATIONS	Dimensions	A					
		B	32	32	32	40	32
		C	72	72	74	65	72
		D	9,5	9,5	12	12	9,5
		E	5	5	4	5,5	5
		F					
		G	56,5	56,5	56,5	70	56,5
		H	32	32	32	32	33
		I					
		L					
		M	6,2 x 10,5	5,3 x 10,4	5,3 x 10,4	7 x 12,4	6,2 x 10,5
		N					
		O					
		P					
		R					
		S					
		T					
		U					
		V	No	Yes	Yes	No	No
		X					
		DIN orientation required	x	x	x	x	x
	Strike model	14 UNI					
		14 DIN... (right-hand GRM)					
		14RR DIN					
		17,116 UNI	x	x	x	x	x
		17RR, 116RR UNI					
		19 UNI					
		19 DIN					
		142 DIN					
		142RR DIN					
	Special features			Meter scribed marking			

* For more **information** on **surface finishes** see from page 236

Order data strike model from page 36 ➔➔

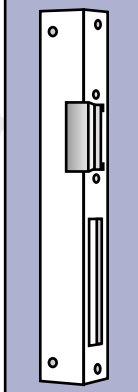

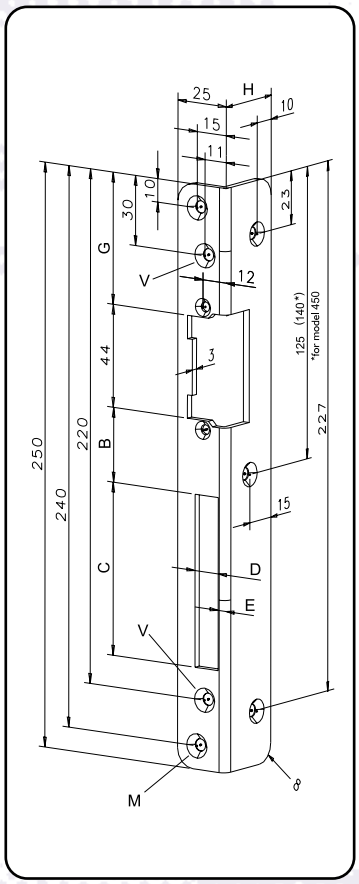

Angled striking plate 277

Balcony and French doors often feature several rebate levels. Here, we recommend the use of striking plates adjusted to the secondary rebate. For 18 mm secondary rebates (build-up of 8 mm) and 20 secondary rebates (build-up of 6 mm), striking plates 042 and 047 can be used.

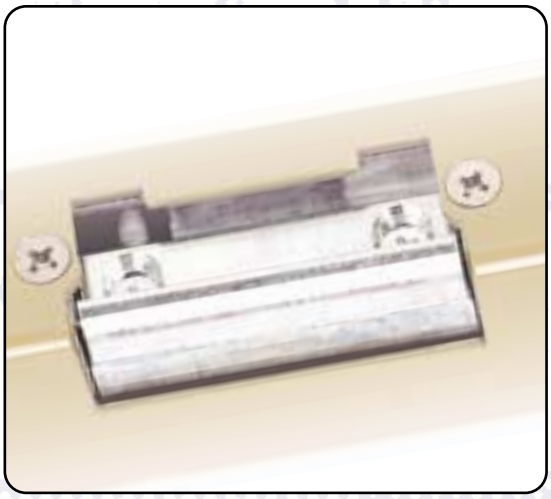

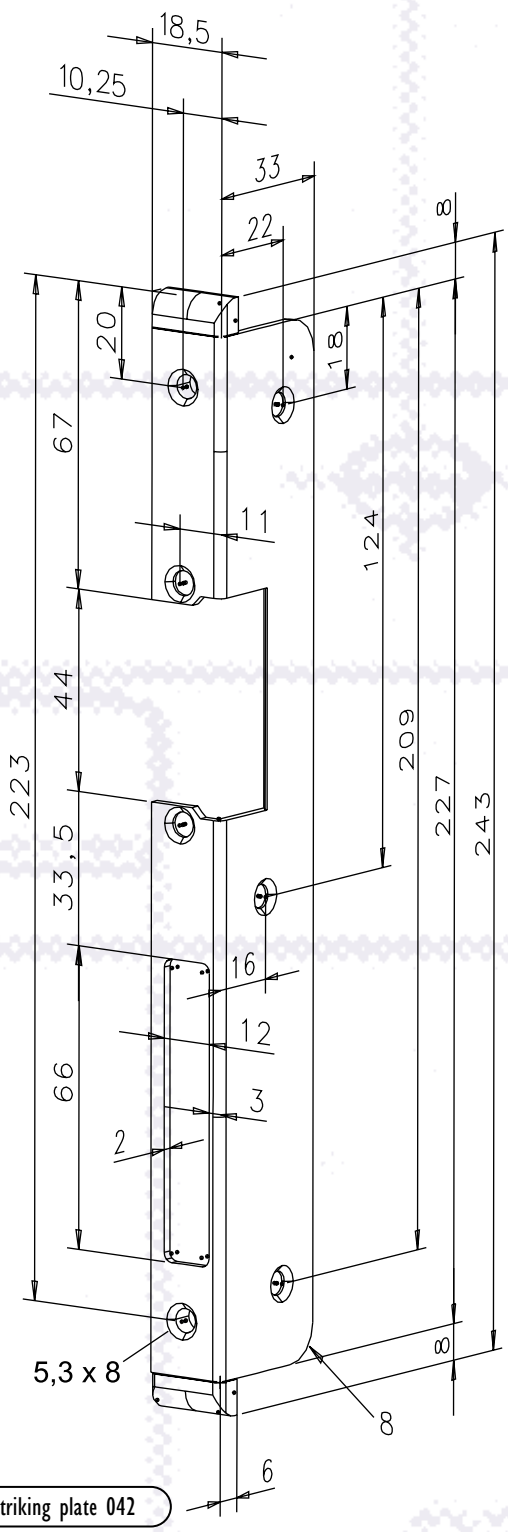

Angled striking plate 042

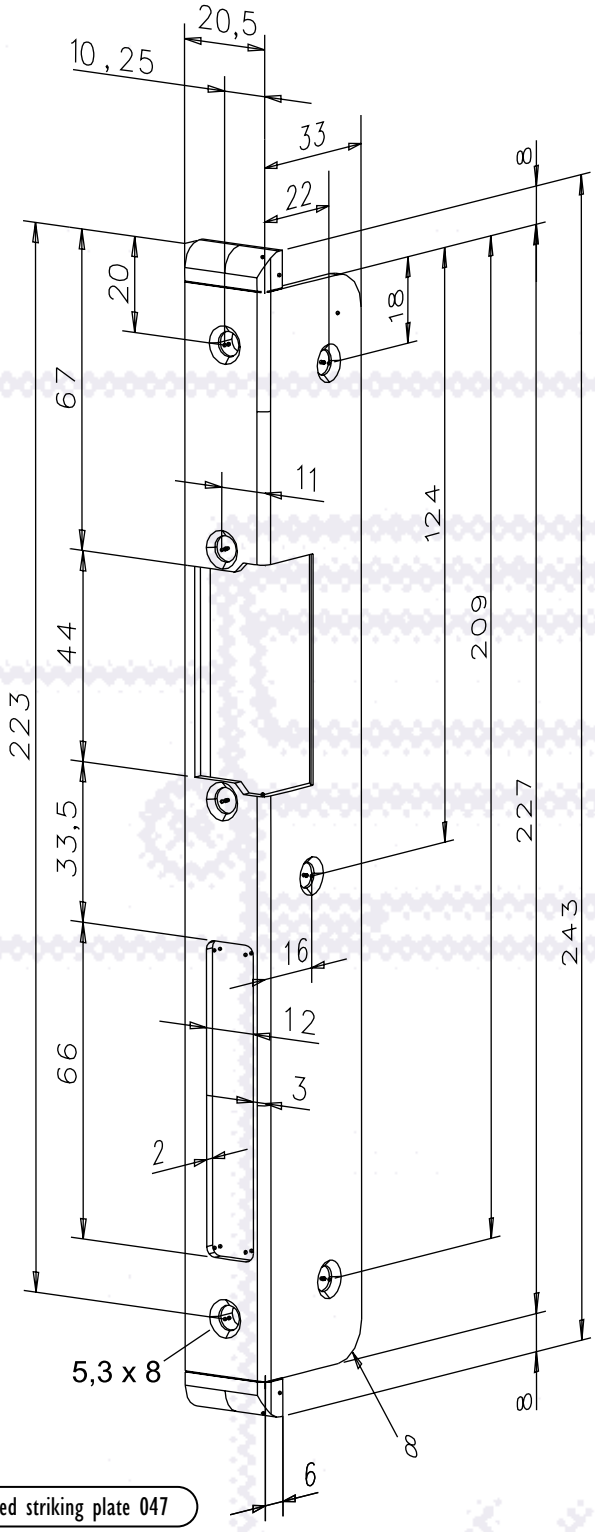

Angled striking plate 047

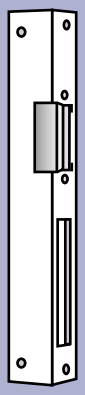

Standard see technical drawing left

	No.		042		047
ORDER DATA	Surface finishes*	Stainless steel			
		Galvanized and ground			
		Polished brass			
		Yellow chromated	41		41
		Gold-coloured			
		Grey			
		Black			
		White			
SPECIFICATIONS	Dimensions	A			
		B			
		C			
		D			
		E			
		F			
		G			
		H			
		I			
		L			
		M			
		N			
		O			
		P			
		R			
		S			
		T			
		U			
		V			
		X			
		DIN orientation required	x		x
	Strike model	14 UNI			
		14 DIN... (right-hand GRM)			
		14RR DIN			
		17,116 UNI			
		17RR, 116RR UNI			
		19 UNI			
		19 DIN	x		x
		142 DIN			
		142RR DIN			
	Special features		for secondary rebate		for secondary rebate

* For more **information** on **surface finishes** see from page 236

Order data strike model from page 36 ➔➔

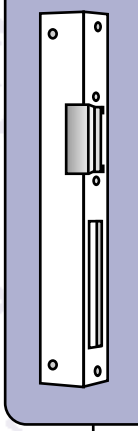

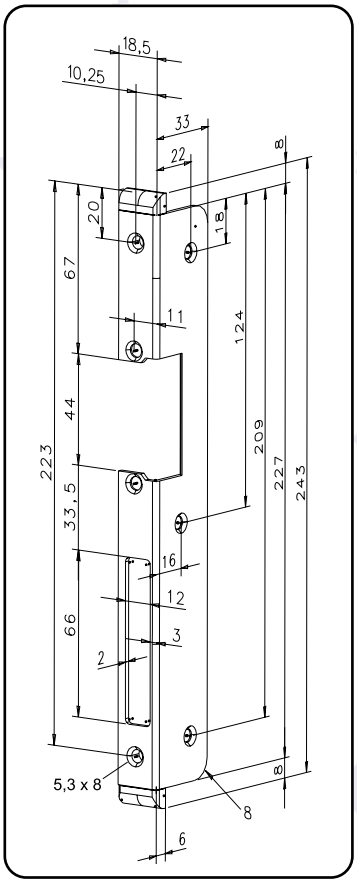

Angled striking plate 042

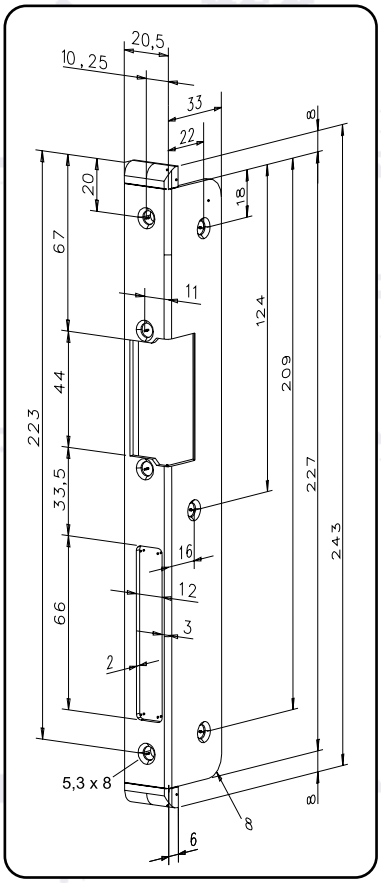

Angled striking plate 047

A special length and twelve fixing holes guarantee a positive locking connection with the frame. In order to prevent break-in even when the dead bolt is not thrown, use of a high-security strike of model series 142 is advisable.

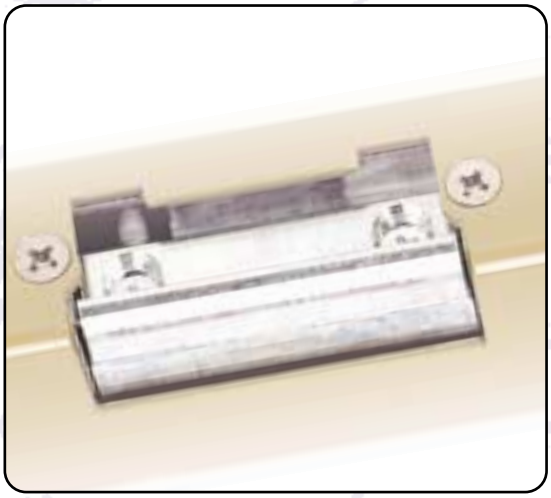

Key

- B Distance from keep aperture to dead bolt aperture.
- C Height of the dead bolt aperture
- D Width of the dead bolt aperture
- E Distance from dead bolt aperture to front edge of striking plate
- F Radius at the striking plate corners

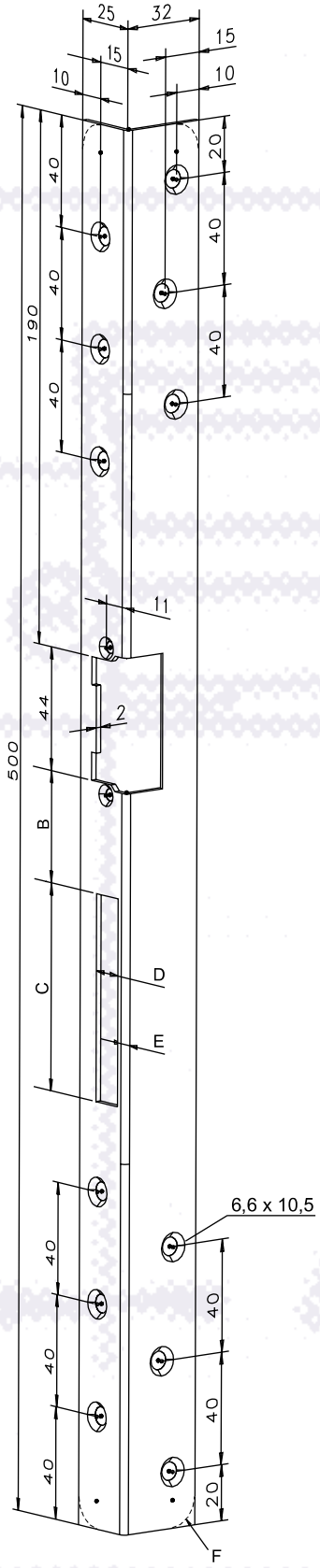

Angled striking plate 312

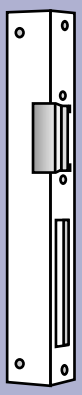

Standard see technical drawing left

	No.		312	826	760	179
ORDER DATA	Surface finishes*	Stainless steel	35			35
		Galvanized and ground	40	40		
		Polished brass	31			31
		Yellow chromated	41			
		Gold-coloured	01	01	01	
		Grey				
		Black	05			
		White		04		
SPECIFICATIONS	Dimensions	A				
		B	40	40		38
		C	74	74		47
		D	12	12		13
		E	4	3		4
		F	No	10	No	No
		G				
		H				
		I				
		L				
		M				
		N				
		O				
		P				
		R				
		S				
		T				
		U				
		V				
		X				
		DIN orientation required	x	x	x	x
	Strike model	14 UNI	x	x	x	x
		14 DIN... (right-hand GRM)	x	x	x	x
		14RR DIN	x	x	x	x
		17,116 UNI	x	x	x	x
		17RR, 116RR UNI	x	x	x	x
		19 UNI				
		19 DIN				
		142 DIN	x	x	x	x
		142RR DIN	x	x	x	x
	Special features				Without dead bolt aperture	Prepared for model 878

* For more **information** on **surface finishes** see from page 236

Order data strike model from page 36 ➔➔

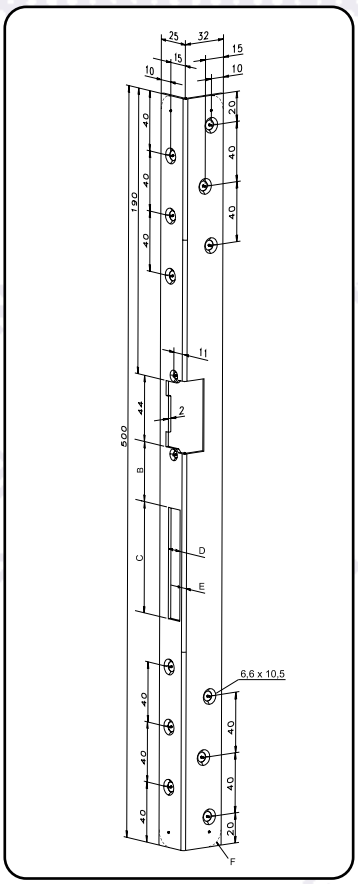

Angled striking plate 312

This group of striking plates is particularly suited for retrofit installations as a "repair striking plate". The larger dimensions permit existing apertures to be effectively covered.

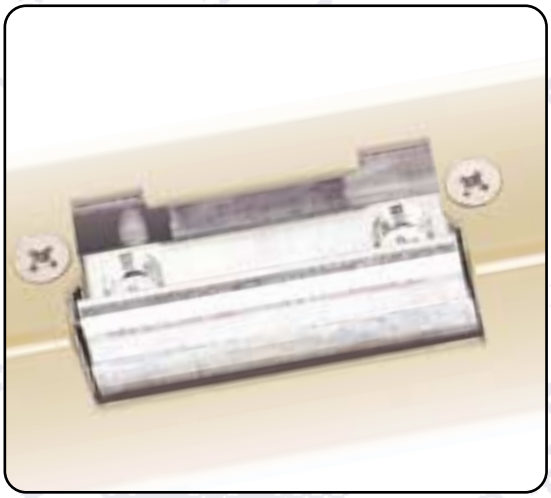

Key

A Width of the striking plate

G Distance from upper edge of striking plate to dead bolt aperture

H Width of second shank in angled striking plates (depth)

L Overall length of the striking plate

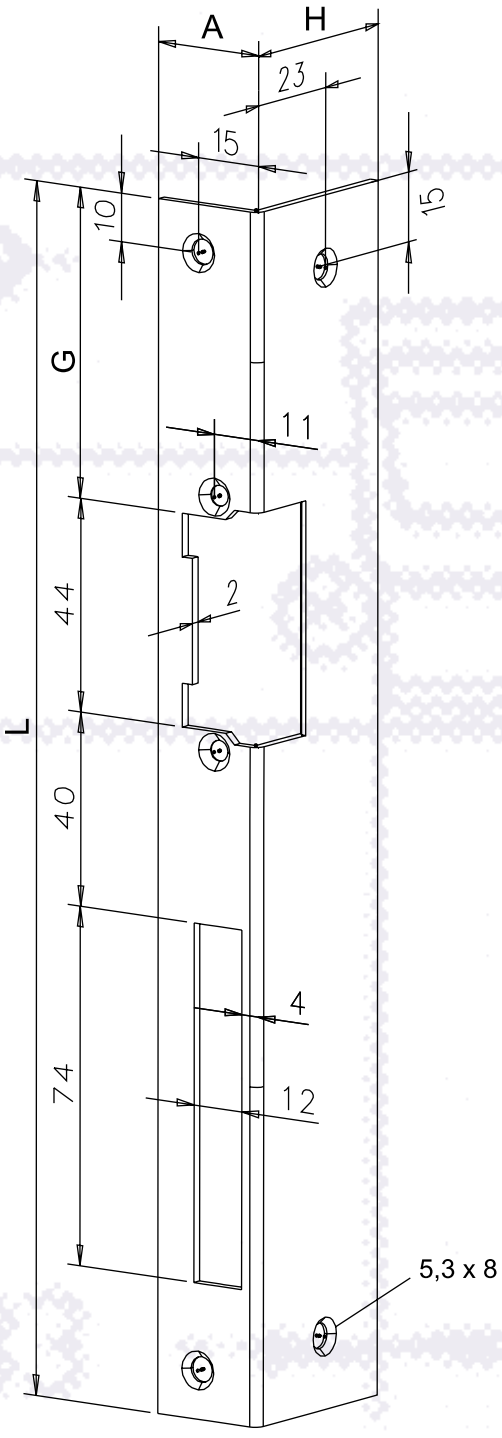

Angled striking plate 422

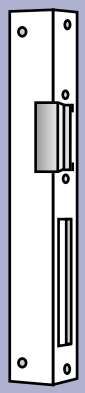

Standard see technical drawing left

ORDER DATA	No.		422	068	160
	Surface finishes*	Stainless steel	35		35
		Galvanized and ground			
		Polished brass			
		Yellow chromated			
		Gold-coloured		01	
		Grey			
		Black			
		White			
SPECIFICATIONS	Dimensions	A	25	25	35
		B			
		C			
		D			
		E			
		F			
		G	64	74	64
		H	41	41	46
		I			
		L	250	260	250
		M			
		N			
		O			
		P			
		R			
		S			
		T			
		U			
		V			
		X			
		DIN orientation required	x	x	x
	Strike model	14 UNI	x	x	x
		14 DIN... (right-hand GRM)	x	x	x
		14RR DIN	x	x	x
		17,116 UNI	x	x	x
		17RR, 116RR UNI	x	x	x
		19 UNI			
		19 DIN			
		142 DIN	x	x	x
		142RR DIN	x	x	x
	Special features				

* For more **information** on **surface finishes** see from page 236

Order data strike model from page 36 ➔➔

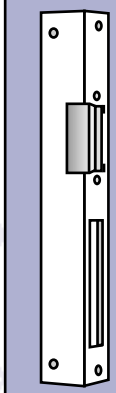

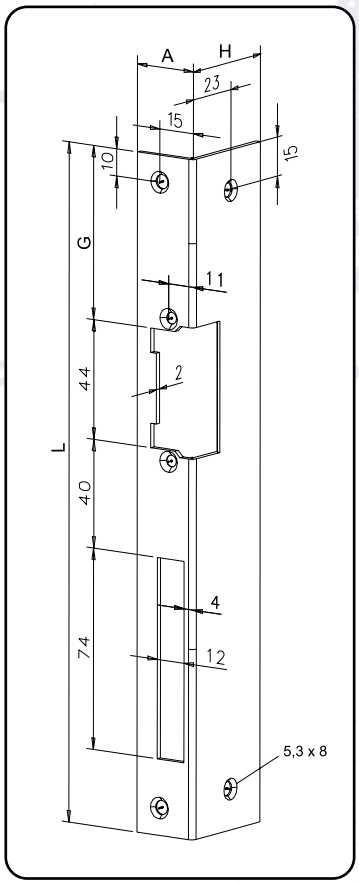

Angled striking plate 422

Widely differing sizes and varying positions of the dead bolt aperture permit combination with a wide variety of different locks. With these striking plates, effeff is also able to cover a range of special cases.

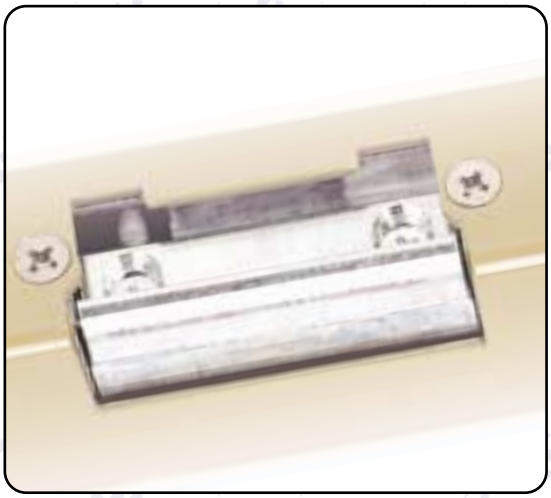

Key

- F Radius at the 4 striking plate corners
- G Distance from upper edge of striking plate to dead bolt aperture
- H Width of the second shank in angled striking plates (depth)
- L Overall length of the striking plate
- M Dimensions of the fixing holes
- V In angled striking plates, additional fixing holes

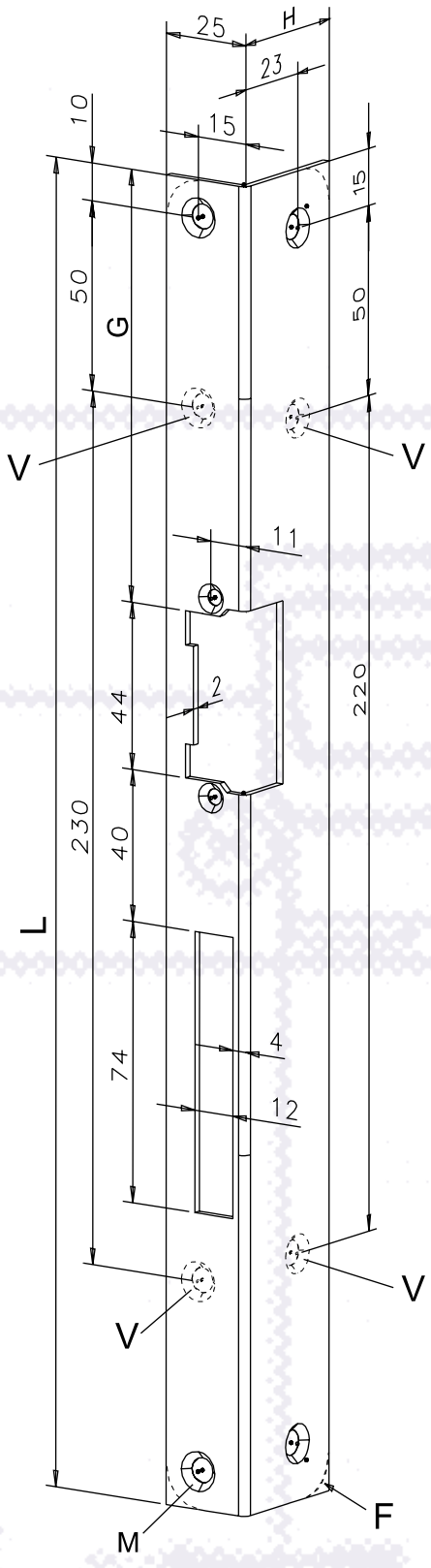

Angled striking plate 420

ANGLED STRIKING PLATES

STRIKING PLATES WITH 280, 300, 350 MM OVERALL LENGTH

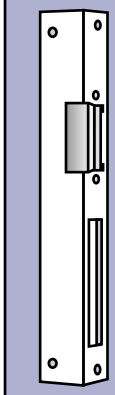

Standard see technical drawing left

	No.		420	334	460	328	415
ORDER DATA	Surface finishes*	Stainless steel	35				
		Galvanized and ground					
		Polished brass					
		Yellow chromated					
		Gold-coloured		01	01	01	01
		Grey					
		Black					
		White					
SPECIFICATIONS	Dimensions	A					
		B					
		C					
		D					
		E					
		F	No	10	No	No	15
		G	114	114	79	64	64
		H	37	37	32	32	32
		I					
		L	350	350	300	280	280
		M	-	6,6 x10,5	5,3x 8	5,3 x 8	5,3 x 8
		N					
		O					
		P					
		R					
		S					
		T					
		U					
		V	No	Yes	No	No	No
		X					
		DIN orientation required	x	x	x	x	x
	Strike model	14 UNI	x	x	x	x	x
		14 DIN... (right-hand GRM)	x	x	x	x	x
		14RR DIN	x	x	x	x	x
		17,116 UNI	x	x	x	x	x
		17RR, 116RR UNI	x	x	x	x	x
		19 UNI					
		19 DIN					
		142 DIN	x	x	x	x	
		142RR DIN	x	x	x	x	x
	Special features						

* For more **information** on **surface finishes** see from page 236

Order data strike model from page 36 ➔➔

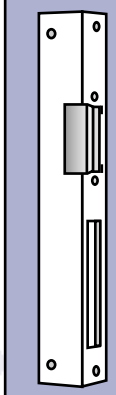

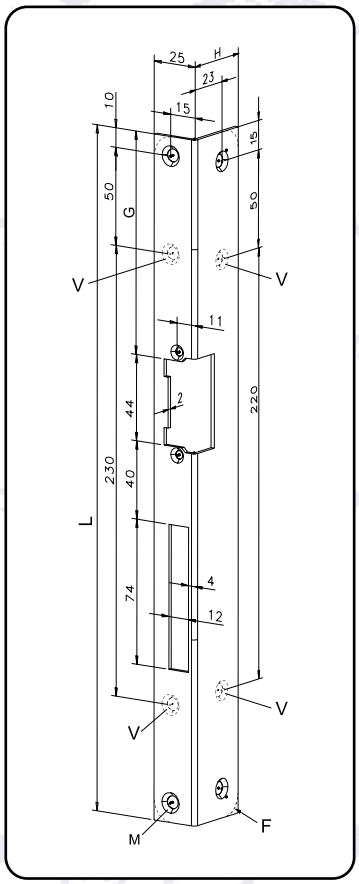

Angled striking plate 420

As a mating component for latch bolt locks without dead bolt, for example in glass doors, short angled striking plates are used. These can be used with models 34 and 37 in combination with our latch bolt locks 802 and 807, also as a supplementary fail unlocked locking system.

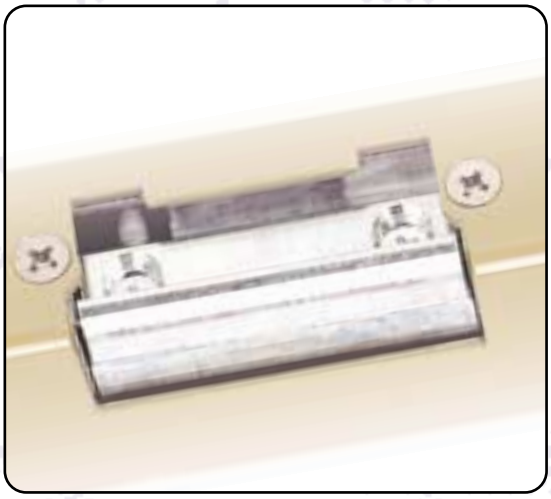

Key

- A Width of the striking plate
- B Distance from the keep aperture to the dead bolt aperture. With KL, kF, KiW, distance from keep aperture to bottom edge of striking plate
- F Radius at the 4 striking plate corners
- G Distance from upper edge of striking plate to keep aperture
- L Overall length of the striking plate
- R Distance of the striking plate fixing hole to upper edge (lower edge) of striking plate.

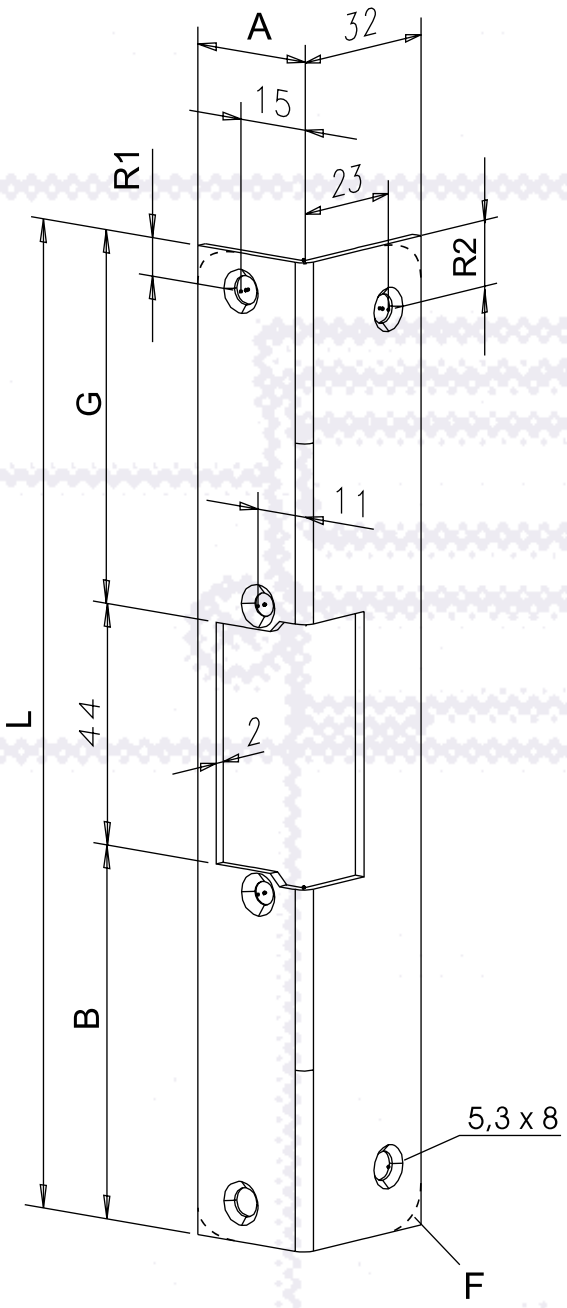

Angled striking plate 137

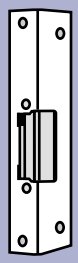

Standard see technical drawing left

ORDER DATA	No.		137	097	389
	Surface finishes*	Stainless steel	35		35
		Galvanized and ground			
		Polished brass			
		Yellow chromated			
		Gold-coloured		01	
		Grey			
		Black			
		White			
SPECIFICATIONS	Dimensions	A	25	25	25
		B	68	52	78
		C			
		D			
		E			
		F	No	No	10
		G	68	64	78
		H			
		I			
		L	180	160	200
		M			
		N			
		O			
		P			
		R1/R2	7/12	10/15	23/15
		S			
		T			
		U			
		V			
		X			
		DIN orientation required			
	Strike model	14 UNI			x
		14 DIN... (right-hand GRM)		x	
		14RR DIN		x	x
		17,116 UNI	x	x	x
		17RR, 116RR UNI	x	x	x
		9334	x		
		142 DIN		x	x
		142RR DIN		x	x
	Special features				

* For more **information** on **surface finishes** see from page 236

Order data strike model from page 36 ➔➔

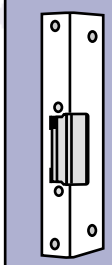

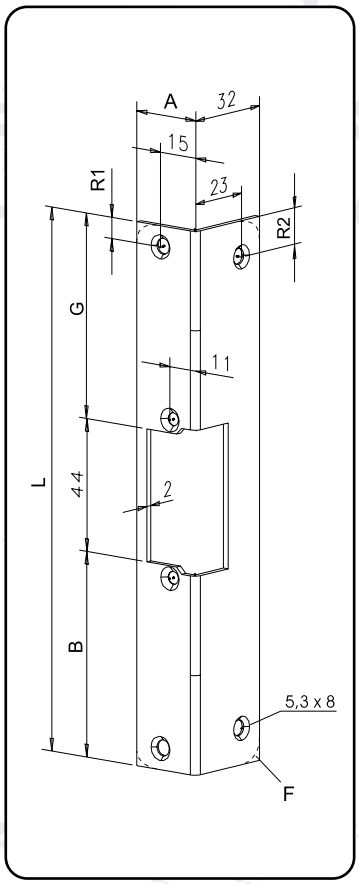

Angled striking plate 137

The wide variety of flat striking plates largely cover the entire range of different metal doors and profiles. Striking plates with offset boreholes (variable "O") were formerly also used in wooden doors. However, for these requirements, effeff now recommends opting for the optically more favourable solutions involving angled striking plates or striking plates with keep guide.

Widely differing sizes and varying positions of the dead bolt aperture permit combination with a wide variety of different locks. The four fixing holes have proven beneficial with low frame material thicknesses and when fixing using sheet metal screws. For this purpose, compare also the installation example "retrofitting" on page 16.

Key

- B Distance from the keep aperture to the dead bolt aperture. With KL, kF, KiW, distance from keep aperture to bottom edge of striking plate
- C Height of dead bolt aperture
- D Width of dead bolt aperture
- E Distance from dead bolt aperture to front edge of striking plate
- M Dimensions of fixing holes
- N Striking plate has parallel fixing hole. Same dimensions as measurement "M"
- O Striking plate has offset fixing hole. Same dimensions as measurement "M"

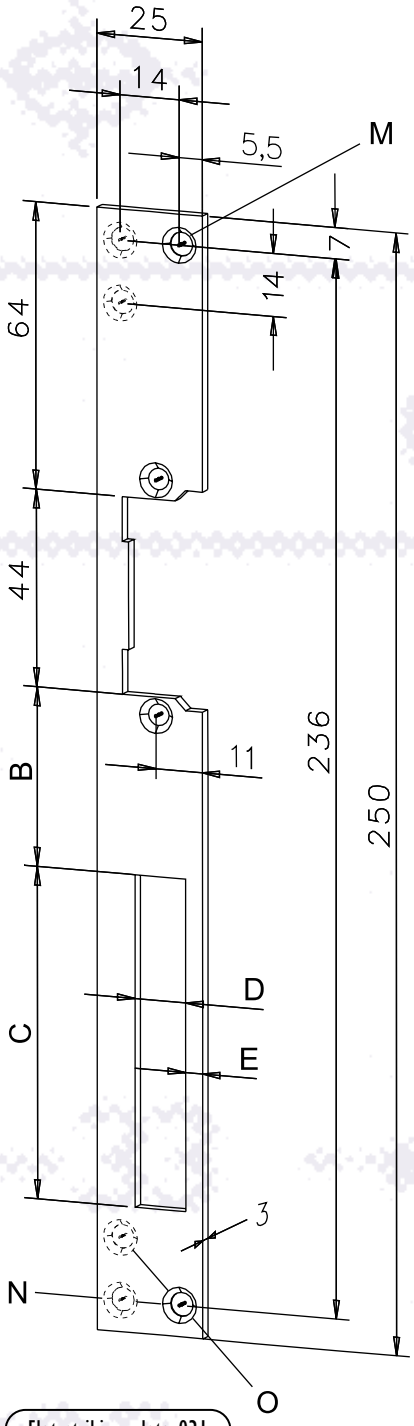

Flat striking plate 021

FLAT STRIKING PLATES

250 MM STANDARD
WITH 4 FIXING HOLES

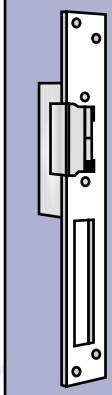

Standard see technical drawing left

	No.		021	038	011	002	264	814	015	010	296	283
ORDER DATA	Surface finishes*	Stainless steel	35	35		35					35	35
		Galvanized and ground	40		40	40	40	40				40
		Polished brass	31									
		Yellow chromated										
		Gold-coloured	01		01		01		01	01	01	01
		Grey	02	02	02		02					02
		Black			05							
		White	04									
SPECIFICATIONS	Dimensions	A										
		B	40			35	11	20	40	40	45	45
		C	74			55	74	74	74	74	45	69
		D	12			13	12	16	12	12	11	12
		E	4			4	4	4	7,5	4	4	4
		F										
		G										
		H										
		I										
		L										
		M	5,3 x 8	5,8 x 8,6	5,3 x 8	5,8 x 8,6	5,8 x 8,6	5,8 x 8,6	5,8 x 8,6	5,3 x 8	5,3 x 8	5,3 x 8
		"M" countersunk on both sides	Yes	Yes	Yes	Yes	Yes	Yes	Yes	Yes	No	Yes
		N	Yes	Yes	No	Yes	Yes	Yes	Yes	No	Yes	Yes
		O	No	No	Yes	No	No	No	No	Yes	No	No
		P										
		R										
		S										
		T										
		U										
		V										
		X										
		DIN orientation required									x	
	Strike model	14 UNI	x	x	x	x			x	x		x
		14 DIN... (right-hand GRM)						x			x	
		14RR DIN	x	x	x	x			x	x	x	x
		14S DIN					x					
		17, 116 UNI	x	x	x	x		x	x	x	x	x
		17RR, 116RR UNI	x	x	x	x			x	x	x	x
		142 DIN	x	x	x	x		x	x	x	x	x
		142RR DIN	x	x	x	x			x	x	x	x
	Special features			Without dead bolt aperture	Without dead bolt aperture	Prepared for model 878					Prepared for model 875	

* For more **information** on **surface finishes** see from page 236

Order data strike model from page 36 ➔➔

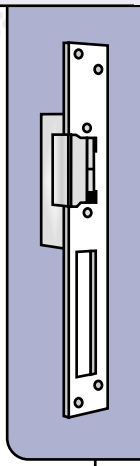

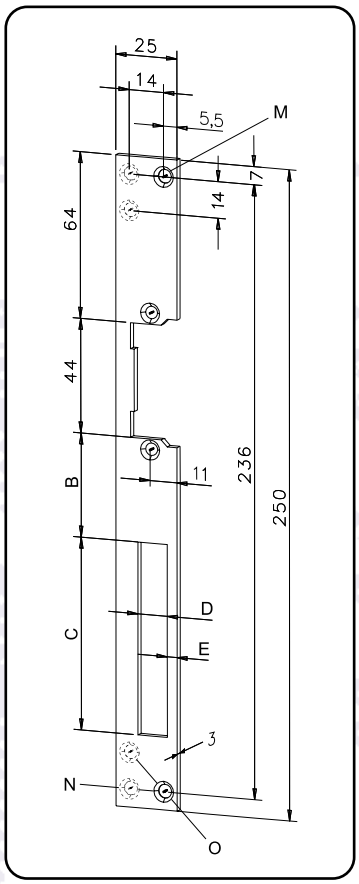

Flat striking plate 021

Widely differing sizes and varying positions of the dead bolt aperture permit combination with a wide variety of different locks. The two fixing holes are suitable for a system using mounting plates SET_LA-M5---00 and SET-LA-M4---00 for flush mounting. Also compare the metal door mounting example on pages 12 and 14. With these striking plate groups, all fixing holes are countersunk on both sides.

Key

- B Distance from the keep aperture to the dead bolt aperture. With KL, kF, KiW, distance from keep aperture to bottom edge of striking plate
- C Height of dead bolt aperture
- D Width of dead bolt aperture
- E Distance from dead bolt aperture to front edge of striking plate
- M Dimensions of fixing holes
- P Distance of door fixing hole to upper edge of striking plate
- R Distance of the striking plate fixing hole to upper edge (lower edge) of striking plate

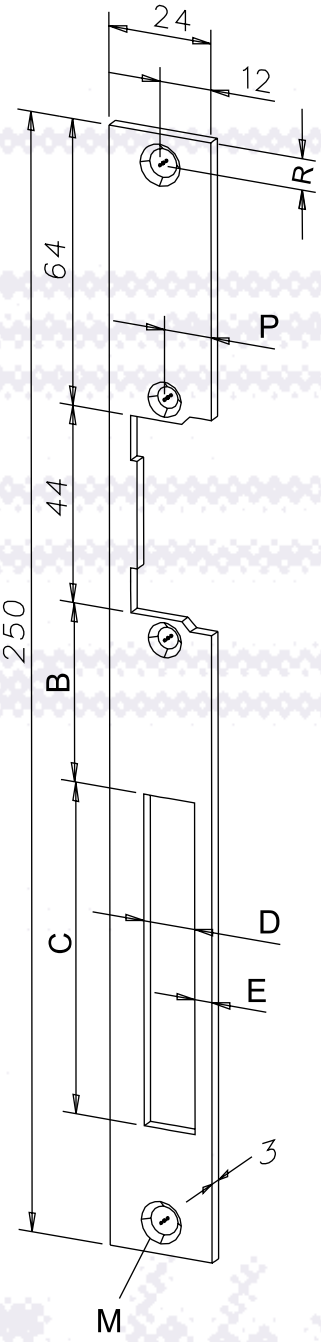

Flat striking plate 338

FLAT STRIKING PLATE

250 MM STANDARD
WITH 2 FIXING HOLES

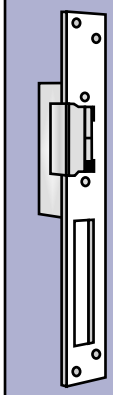

Standard see technical drawing left

	No.		338	360	049	385	381	320	311	331	359	452
ORDER DATA	Surface finishes*	Stainless steel	35	35	35	35			35	35		35
		Galvanized and ground	40	40	40		40	40		40	40	
		Polished brass										
		Yellow chromated										
		Gold-coloured										
		Grey	02									
		Black										
		White										
SPECIFICATIONS	Dimensions	A										
		B	40	37	37	20	50	37	40	39,5	50	40
		C	74	74	74	74	58	58	74	65	65	58
		D	12	12	12	16	12	12	12	12	12	12,8
		E	4	6	6	4	6	5	6	5	5	4,7
		F										
		G										
		H										
		I										
		L										
		M	6,4 x 9,4	6,4 x 9,4	6,4 x 9,4	6,4 x 9,4	6,4 x 9,4	6,4 x 9,4	6,5 x 9,4	6,3 x 9,4	6,3 x 9,4	5,3 x 9,4
		N										
		O										
		P	11	13	14	11	12	11	11	11	11	13
		R	7	7	7	7	7	7	8	7	7	7
		S										
		T										
		U										
		V										
		X										
		DIN orientation required										
	Strike model	14 UNI	x	x	x		x	x	x	x	x	x
		14 DIN... (right-hand GRM)				x						
		14RR DIN	x	x	x		x	x	x	x	x	x
		17,116 UNI	x	x	x	x	x	x	x	x	x	x
		17RR, 116RR UNI	x	x	x		x	x	x	x	x	x
		19 UNI										
		19 DIN										
		142 DIN	x	x	x	x	x	x	x	x	x	x
		142RR DIN	x	x	x		x	x	x	x	x	x
	Special features						Additional fixing hole between keep and dead bolt					

* For more **information** on **surface finishes** see from page 236

Order data strike model from page 36 ➔➔

FLAT STRIKING PLATE

250 MM STANDARD
WITH 2 FIXING HOLES

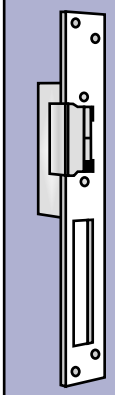

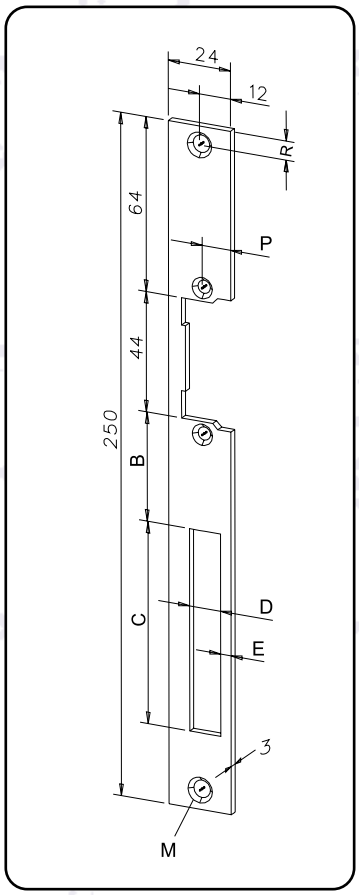

Flat striking plate 338

In aluminium and plastic profiles, the distance between the screw-on surface of the face plate and the screw-on surface of the striking plate is between 10 and 15 mm. In order to ideally coordinate the geometry of the keep and the latch bolt, effeff offers two matching striking plate variants. These provide a 6 (5) mm build-up and so position the keep towards the latch bolt (see also application example for plastic profiles on page 30). For model series 17 and 14 FaFix strikes, effeff also holds surface mounted components with projecting keep. Compare also the chapter on surface-mounted components on page 230.

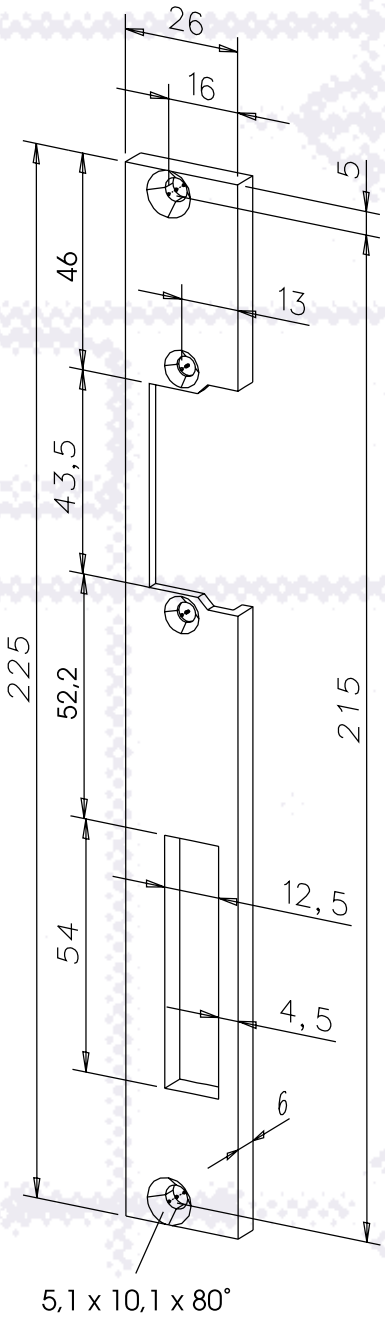

Flat striking plate 354

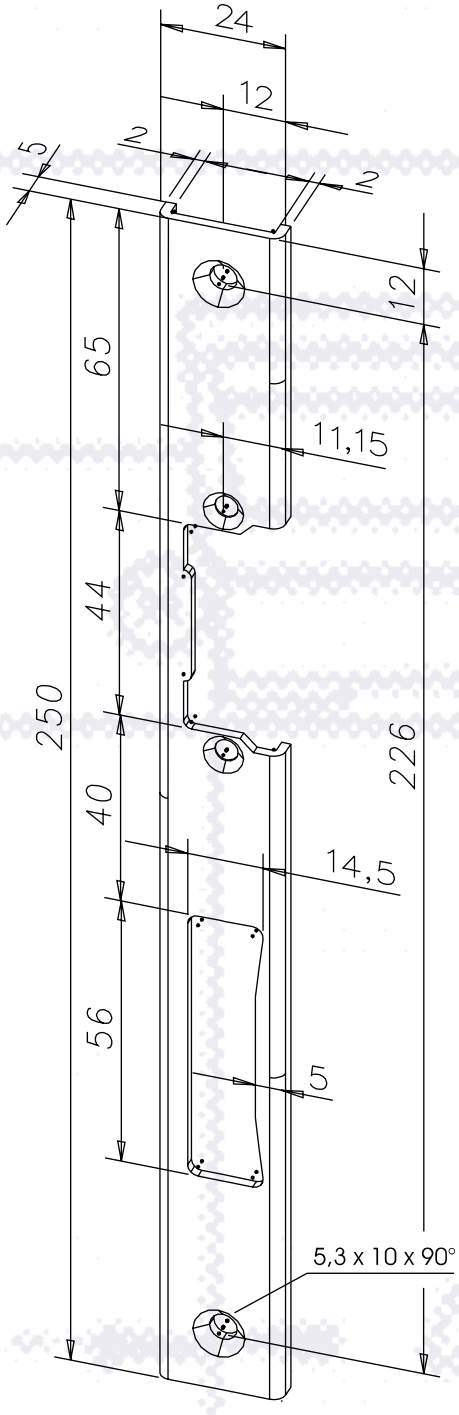

Flat striking plate 391

FLAT STRIKING PLATE

FOR PLASTIC PROFILES

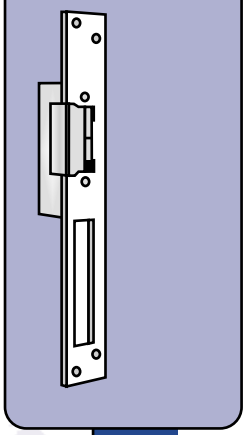

Standard see technical drawing left

	No.		354	936	391
ORDER DATA	Surface finishes*	Stainless steel		35	35
		Galvanized and ground	40		
		Polished brass			
		Yellow chromated			
		Gold-coloured			
		Grey			
		Black			
		White			
SPECIFICATIONS	Dimensions	A			
		B			
		C			
		D			
		E			
		F			
		G			
		H			
		I			
		L			
		M			
		N			
		O			
		P			
		R			
		S			
		T			
		U			
		V			
		X			
		DIN orientation required	x	x	x
	Strike model	14 UNI		x	x
		14 DIN... (right-hand GRM)		x	
		14RR DIN		x	x
		17, 116 UNI	x	x	x
		17RR, 116RR UNI	x	x	x
		19 UNI			
		19 DIN			
		142 DIN		x	x
		142RR DIN		x	x
	Special features				supplied with plastic end caps, screws and rivet nuts

* For more **information** on **surface finishes** see from page 236

Order data strike model from page 36 ➔➔

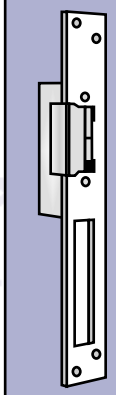

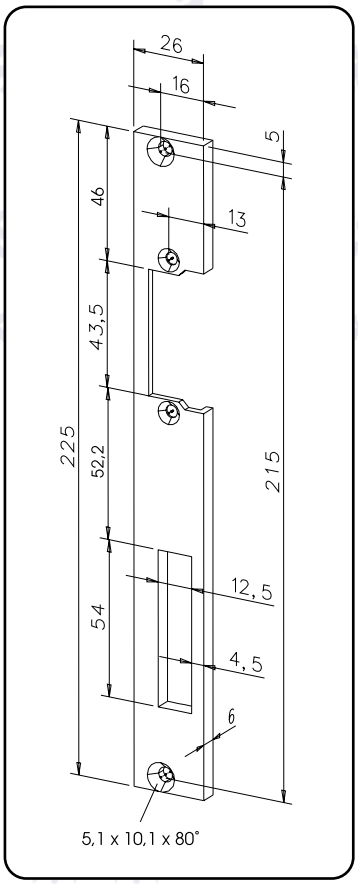

Flat striking plate 354

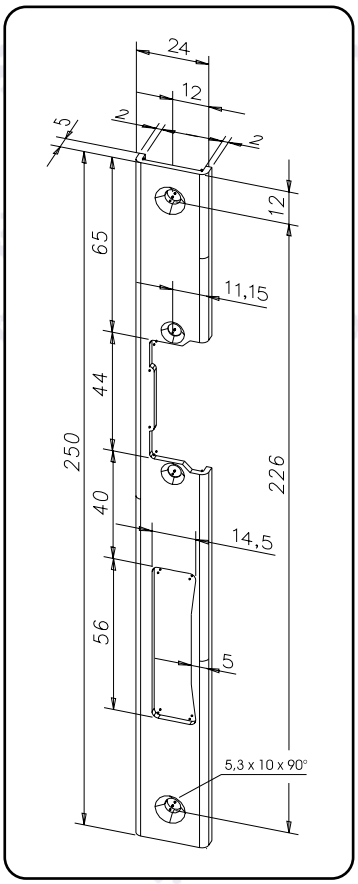

Flat striking plate 391

Widely differing sizes and varying positions of the dead bolt aperture permit combination with a wide variety of different locks. With these striking plates, effeff also covers special applications.

Key

- A Width of the striking plate
- B Distance from the keep aperture to the dead bolt aperture. With KL, kF, KiW, distance from keep aperture to bottom edge of striking plate
- C Height of dead bolt aperture
- E Distance from dead bolt aperture to front edge of striking plate
- G Distance from upper edge of striking plate to keep aperture
- L Overall length of the striking plate
- M Dimensions of fixing holes
- P Distance of door fixing hole to upper edge of striking plate
- R Distance of the striking plate fixing hole to upper edge (lower edge) of striking plate

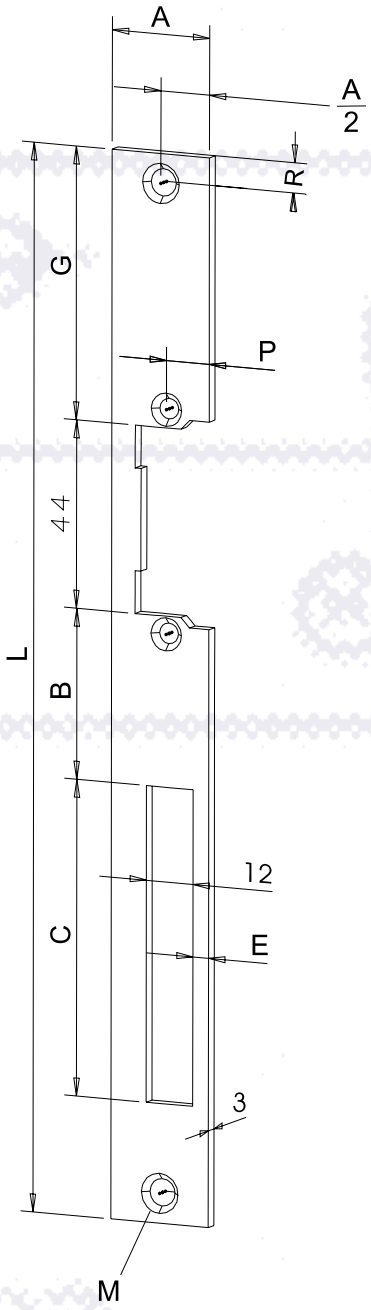

Flat striking plate 426

FLAT STRIKING PLATE WITH SPECIAL DIMENSIONS

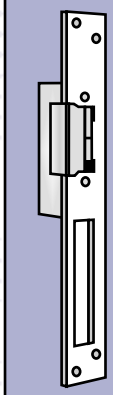

Standard see technical drawing left

	No.		426	855	350	358	769	394
ORDER DATA	Surface finishes*	Stainless steel		35	35			
		Galvanized and ground	40		40	40	40	
		Polished brass						
		Yellow chromated						
		Gold-coloured						
		Grey		02				02
		Black						
		White						
SPECIFICATIONS	Dimensions	A	25	23	25	28	28	24
		B	40	40	41	43	43	32
		C	74	74	65	65	65	74
		D						
		E	4	5	6,5	8	6	4
		F						
		G	64	63	59	43	43	98
		H						
		I						
		L	250	250	225	245	245	280
		M	6,4 x 9,4	5,3 x 8	6 x 8	6,5 x 9	6,5 x 9	5,3 x 8
		N						
		O						
		P	11	11	12,5	14	14	11
		R	7	7	8	12	12	10
		S						
		T						
		U						
		V						
		X						
		DIN orientation required						
	Strike model	14 UNI	x		x			
		14 DIN... (right-hand GRM)						x
		14RR DIN	x		x			x
		17, 116 UNI	x		x	x	x	x
		17RR, 116RR UNI	x		x			x
		19 UNI		x				
		19 DIN		x				
		142 DIN	x		x			x
		142RR DIN	x		x			x
	Special features					Additional fixing hole between keep and dead bolt	Additional fixing hole between keep and dead bolt	

* For more **information** on **surface finishes** see from page 236

Order data strike model from page 36 ➔➔

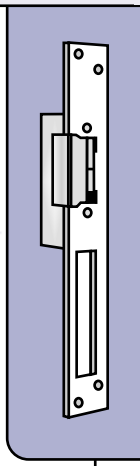

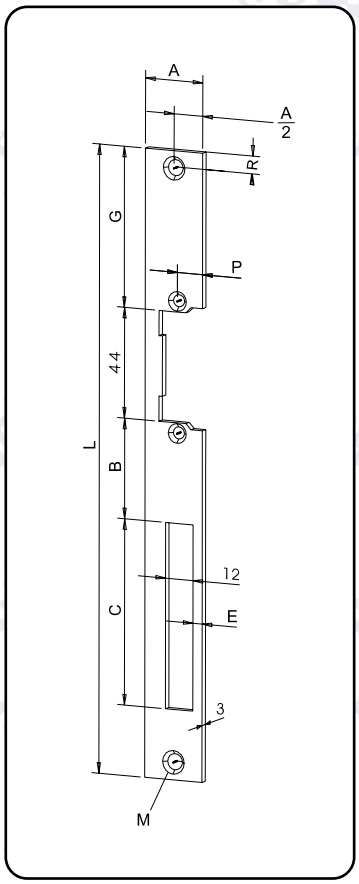

Flat striking plate 426

For narrow mounting conditions, special striking plates are available from effeff which are designed for use with model series 19 and 119.

Key

- B Distance from the keep aperture to the dead bolt aperture. With KL, kF, KiW, distance from keep aperture to bottom edge of striking plate
- C Height of dead bolt aperture
- D Width of dead bolt aperture
- E Distance from dead bolt aperture to front edge of striking plate
- F Radius at the 4 striking plate corners
- G Distance from upper edge of striking plate to keep aperture
- I Striking plate thickness
- L Overall length of the striking plate
- M Dimensions of fixing holes
- P Distance of door fixing hole to upper edge of striking plate
- R Distance of the striking plate fixing hole to upper edge (lower edge) of striking plate

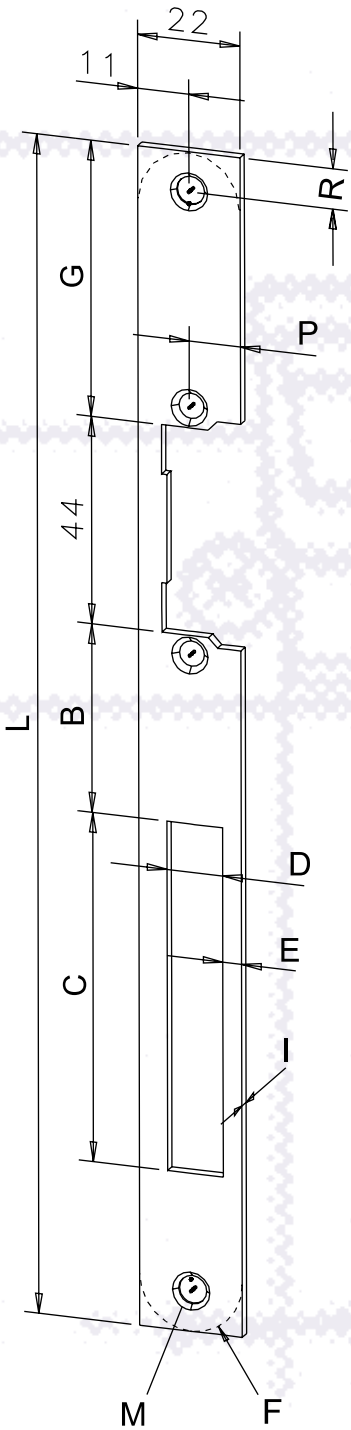

Flat striking plate 434

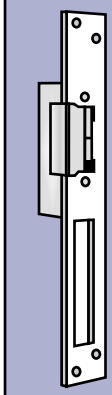

Standard see technical drawing left

	No.		434	171	445	443	444	343	356	467
ORDER DATA	Surface finishes*	Stainless steel	35		35	35	35			
		Galvanized and ground			40	40	40	40	40	40
		Polished brass								
		Yellow chromated								
		Gold-coloured	01	01	01	01	01	01		
		Grey			02	02	02			
		Black								
		White								
SPECIFICATIONS	Dimensions	A								
		B	40	40	15	45	28	37,5	47	25,5
		C	74	74	85	68	85	50	50	55
		D	12	12	14	14	14	12	12	13
		E	4	4	4	4	4	3	4,7	4,5
		F	No	11	No	No	No	No	No	No
		G	58,5	58,5	64	64	64	62	62	75
		H								
		I	2,5	2,5	3	3	3	2,5	2,5	2,5
		L	250	250	250	250	250	257	257	270
		M	6 x 8	6 x 8	5,3 x 8	5,3 x 8	5,3 x 8	6 x 8	6 x 8	6 x 8
		N								
		O								
		P	11	11	11	11	11	11	10	11
		R	8,5	8,5	12	12	12	12	12	12
		S								
		T								
		U								
		V								
		X								
		DIN orientation required								
	Strike model	14 UNI								
		14 DIN... (right-hand GRM)								
		14RR DIN								
		17, 116 UNI								
		17RR, 116RR UNI								
		19 UNI	x	x		x		x	x	
		19 DIN, 19A			x		x			x
		142 DIN								
		142RR DIN								
	Special features									

* For more **information** on **surface finishes** see from page 236

Order data strike model from page 48

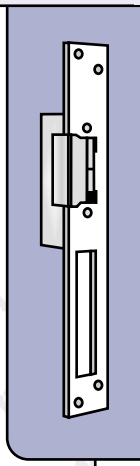

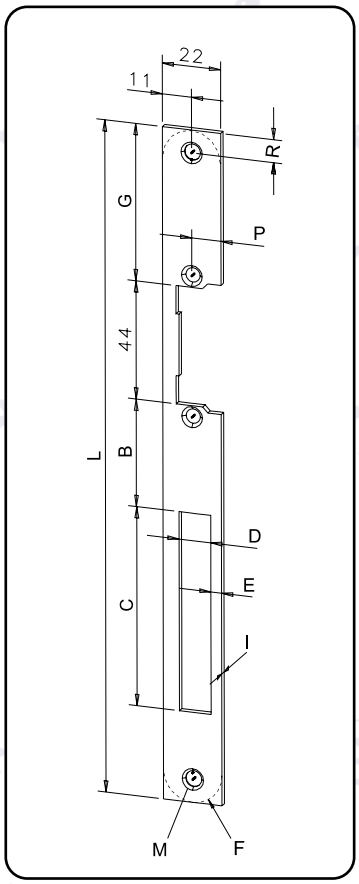

Flat striking plate 434

With striking plate 174 as a special striking plate with radius and striking plate 013, effeff offers two special variants. The length of the striking plate 013 and the twelve fixing holes ensure a positive-locking connection to the frame. High-security strikes of model series 142 are specifically suited to prevent break-ins, even when the dead bolt is not thrown.

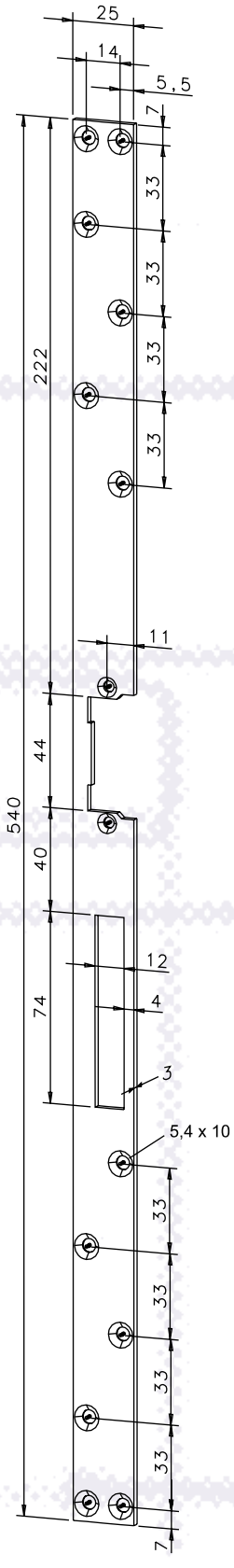

Flat striking plate 013

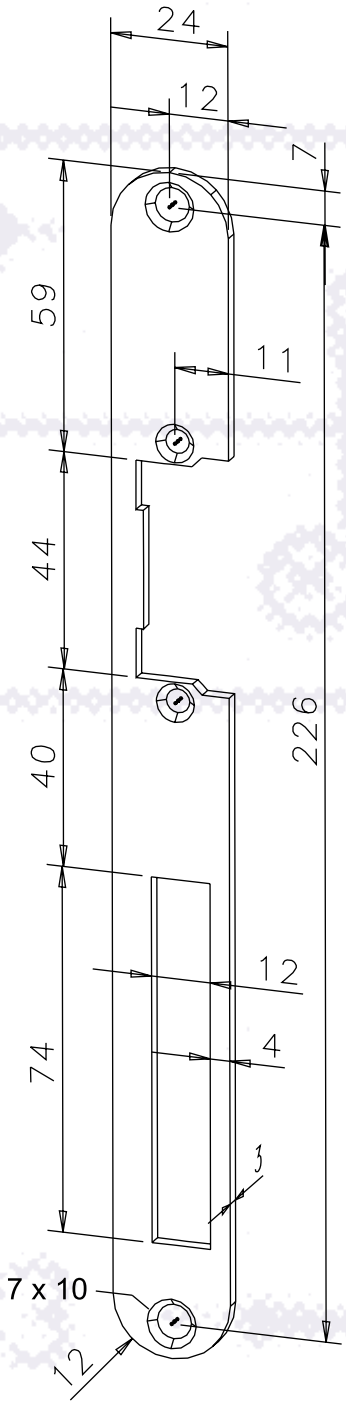

Flat striking plate 174

FLAT STRIKING PLATES

- FLAT STRIKING PLATE WITH RADIUS
- HIGH-SECURITY STRIKING PLATE

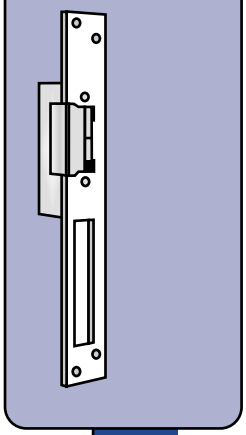

Standard see technical drawing left

ORDER DATA	No.		013		174	053
	Surface finishes*	Stainless steel				
		Galvanized and ground	40			
		Polished brass				
		Yellow chromated				
		Gold-coloured	01		01	
		Grey			02	02
		Black				
		White				
SPECIFICATIONS	Dimensions	A				
		B				
		C				
		D				
		E				
		F				
		G				
		H				
		I				
		L				
		M				
		N				
		O				
		P				
		R				
		S				
		T				
		U				
		V				
		X				
		DIN orientation required	x			
	Strike model	14 UNI	x		x	x
		14 DIN..., 14A	x		x	x
		14RR DIN	x		x	x
		17.116 UNI	x		x	x
		17RR, 116RR UNI	x		x	x
		19 UNI	x		x	x
		19 DIN				
		142 DIN	x		x	x
		142RR DIN	x		x	x
	Special features					Without dead bolt aperture

* For more **information** on **surface finishes** see from page 236

Order data strike model from page 36 ➔➔

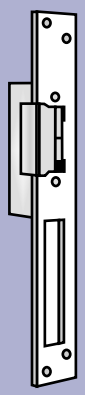

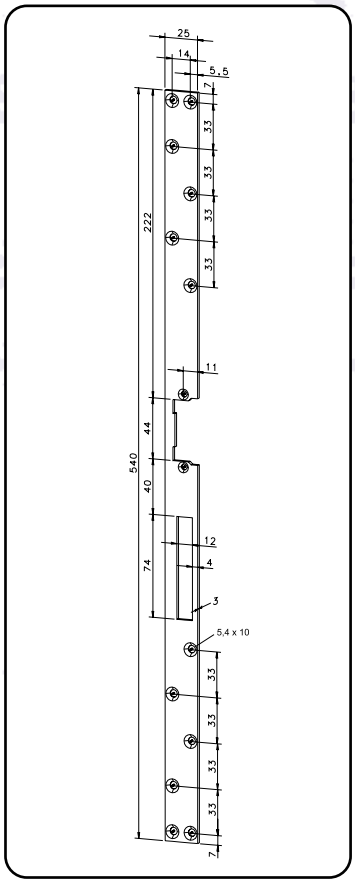

Flat striking plate 013

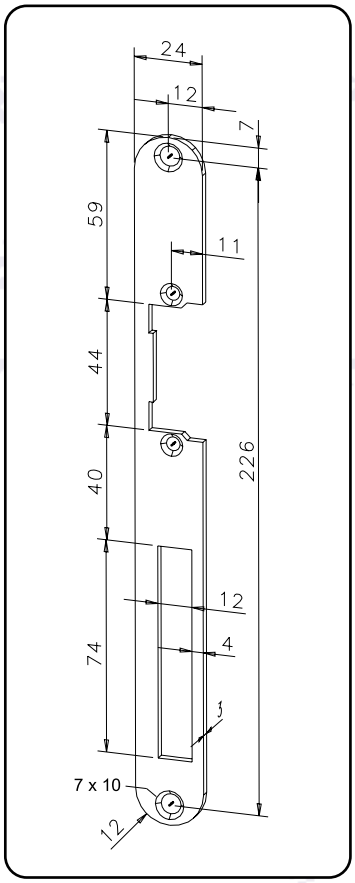

Flat striking plate 174

effeff offers a varied range of striking plates specifically for strikes with FIX grooves. The FIX adjusting function is described on page 237. The four fixing holes have proven beneficial with low frame material thicknesses and when fixing using sheet metal screws. For this purpose, compare also the installation example "retrofitting" on page 16.

Key

- B Distance from the keep aperture to the dead bolt aperture. With KL, kF, KiW, distance from keep aperture to bottom edge of striking plate
- C Height of dead bolt aperture
- D Width of dead bolt aperture
- E Distance from dead bolt aperture to front edge of striking plate
- G Distance from upper edge of striking plate to keep aperture
- L Overall length of the striking plate
- M Dimensions of fixing holes

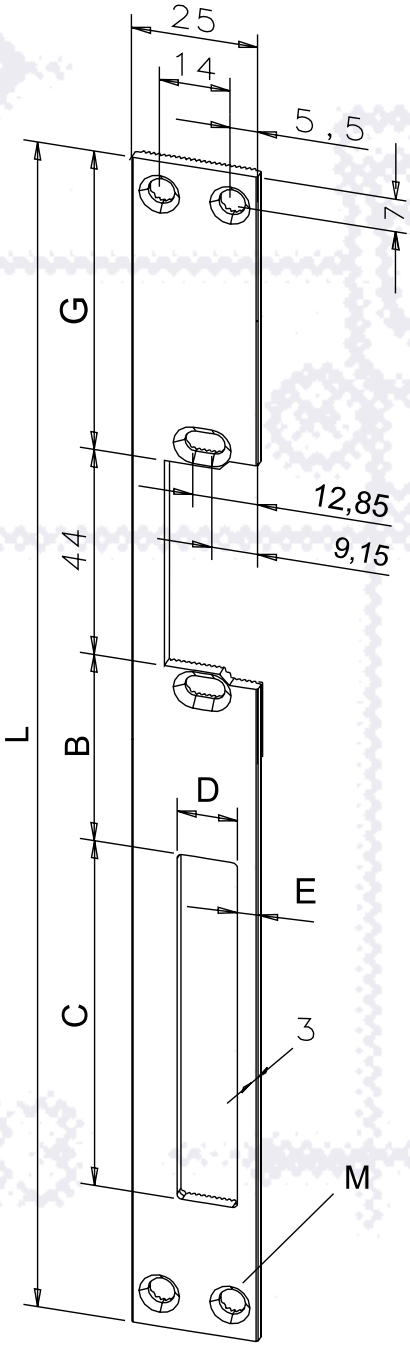

Flat striking plate 051

FLAT STRIKING PLATES

STANDARD 4 FIXING HOLES
WITH FIX GROOVES

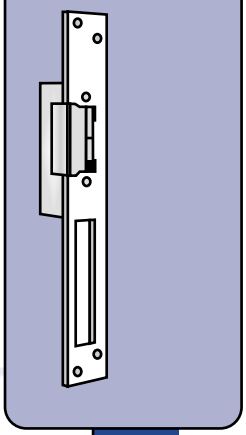

Standard see technical drawing left

		No.	051	052	333	181	050
ORDER DATA	Surface finishes*	Stainless steel	35			35	35
		Galvanized and ground	40		40		40
		Polished brass					
		Yellow chromated					
		Gold-coloured	01				
		Grey	02	02			
		Black					
		White					
SPECIFICATIONS	Dimensions	A					
		B	40		42	42	40
		C	74		74	50	74
		D	12		12	12	12
		E	4		4	4	4
		F					
		G	64	64	94	94	64
		H					
		I					
		L	250	250	280	280	250
		M	5,3 x 8	5,3 x 8	6,5 x 10,4	6,5 x 10,4	5,3 x 8
		N					
		O					
		P					
		R					
		S					
		T					
		U					
		V					
		X					
		DIN orientation required	x	x	x	x	x
	Strike model	14 Fix UNI	x	x	x	x	x
		14 Fix DIN... (right-hand GRM)	x	x	x	x	x
		14RR Fix DIN	x	x	x	x	
		12wd Fix DIN	x	x	x	x	
		12wdRR Fix DIN	x	x	x	x	
		12wdE					x
		142 Fix DIN	x	x	x	x	
		142RR Fix DIN	x	x	x	x	
	Special features			Without dead bolt aperture		Prepared for model 878	

* For more **information** on **surface finishes** see from page 236

Order data strike model from page 36 ➔➔

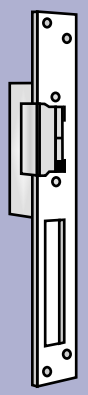

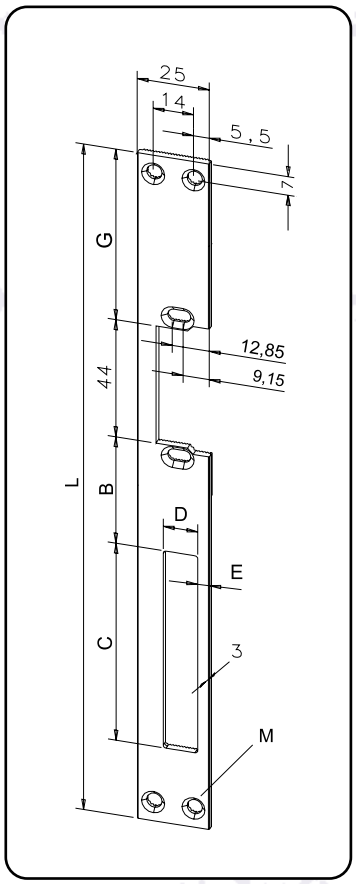

Flat striking plate 051

effeff offers a varied range of striking plates specifically for strikes with FIX grooves. The FIX adjusting function is described on page 237. Different sizes and varying positions of the dead bolt aperture permit combination with a wide range of different locks The two fixing holes are suitable for systems using mounting plates SET-LA-M5---00 and SET-LA-M4---00 for flush mounting. Also compare the metal door mounting example on pages 12 and 14.

Key

- A Width of the striking plate
- B Distance from the keep aperture to the dead bolt aperture. With KL, kF, KiW, distance from keep aperture to bottom edge of striking plate
- C Height of dead bolt aperture
- D Width of dead bolt aperture
- E Distance from dead bolt aperture to front edge of striking plate
- F Radius at the 4 striking plate corners
- G Distance from upper edge of striking plate to keep aperture
- L Overall length of the striking plate
- M Dimensions of fixing holes
- R Distance of the striking plate fixing hole to upper edge (lower edge) of striking plate

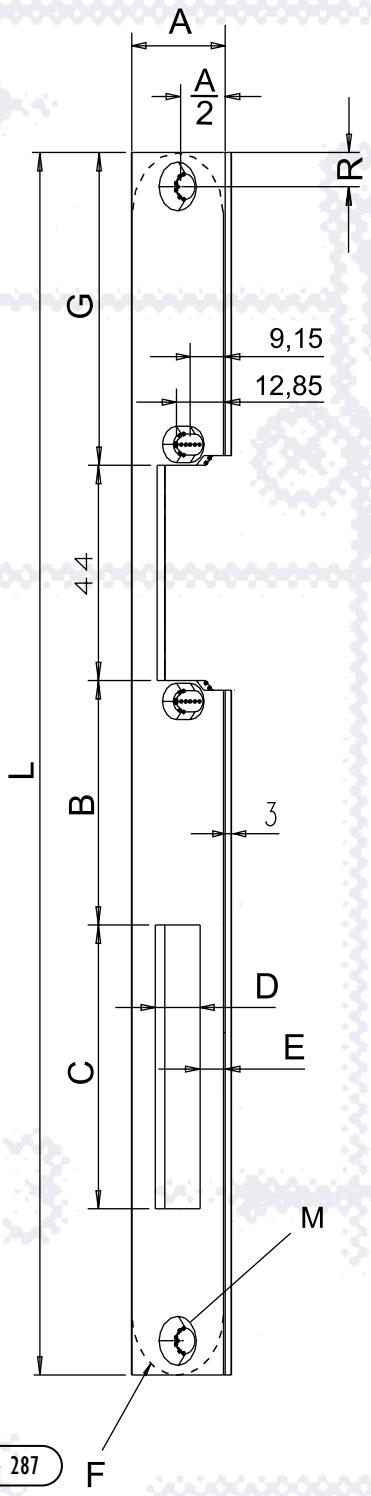

Flat striking plate 287

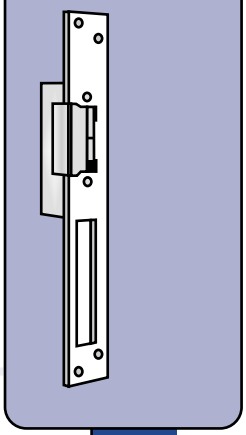

Standard see technical drawing left

ORDER DATA	No.		287	054	370	909	355	318	928	186
	Surface finishes*	Stainless steel			35			35		
		Galvanized and ground	40		40	40	40		40	
		Polished brass								
		Yellow chromated				41				
		Gold-coloured	01							
		Grey	02	02			02			02
		Black	05							
		White	04							
SPECIFICATIONS	Dimensions	A	25	25	24	24	24	24	24	24
		B	50	35	33	33	32	40	40	40
		C	58	55	55	55	74	74	50	74
		D	12	13	13	13	12	12	12	12
		E	6,5	4	5	4	4	4,5	3	4
		F	No	No	12	12	No	No	No	12
		G	64	64	64	64	98	59	59	59
		H								
		I								
		L	250	250	250	250	280	237	237	240
		M	5,2 x 10	5,3 x 10	5,3 x 10	5,3 x 10	5,3 x 10	5,3 x 9,5	5,3 x 9,5	5,3 x 10
		N								
		O								
		P								
		R	7	7	13	13	10	8	8	7
		S								
		T								
		U								
		V								
		X								
		DIN orientation required	x	x	x	x	x	x	x	x
	Strike model	14 Fix UNI	x	x				x	x	x
		14 Fix DIN... (right-hand GRM)			x	x	x			
		14RR Fix DIN	x	x	x	x	x	x	x	x
		12wd Fix DIN	x	x	x	x	x	x	x	x
		12wdRR Fix DIN	x	x	x	x	x	x	x	x
		12wdE								
		142 Fix DIN	x	x	x	x	x	x	x	x
		142RR Fix DIN	x	x	x	x	x	x	x	x
	Special features			Prepared for model 878		Prepared for model 878				

* For more **information** on **surface finishes** see from page 236

Order data strike model from page 36 ➔➔

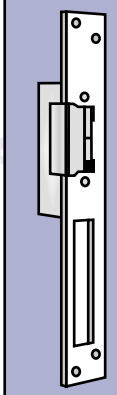

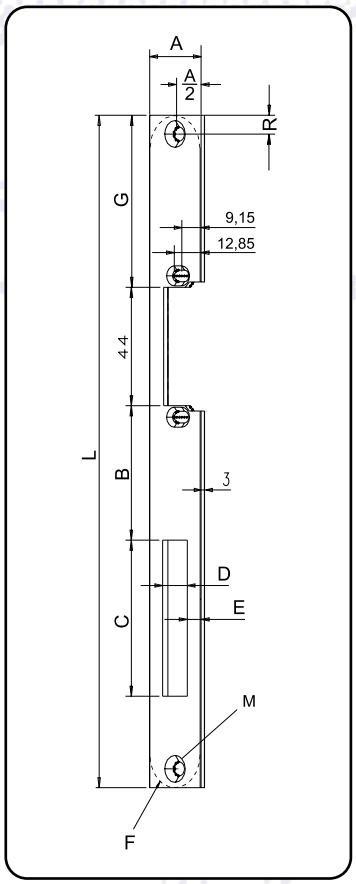

Flat striking plate 287

As a mating component for latch bolt locks without dead bolt, for example in glass doors, short flat striking plates are used. These can be used with model 34 in combination with our latch bolt locks 802 and 807, also as a supplementary fail unlocked locking system. The two fixing holes are suitable for a system using mounting plates SET_LA-M5---00 and SET-LA-M4---00 for flush mounting. Also compare the metal door mounting example on pages 12 and 14.

Key

- A Width of the striking plate
- B Distance from the keep aperture to the dead bolt aperture. With KL, kF, KiW, distance from keep aperture to bottom edge of striking plate
- F Radius at the 4 striking plate corners
- G Distance from upper edge of striking plate to keep aperture
- L Overall length of the striking plate
- M Dimensions of fixing holes
- P Distance from striking plate fixing hole to front edge of striking plate
- R Distance of the striking plate fixing hole to upper edge (lower edge) of striking plate

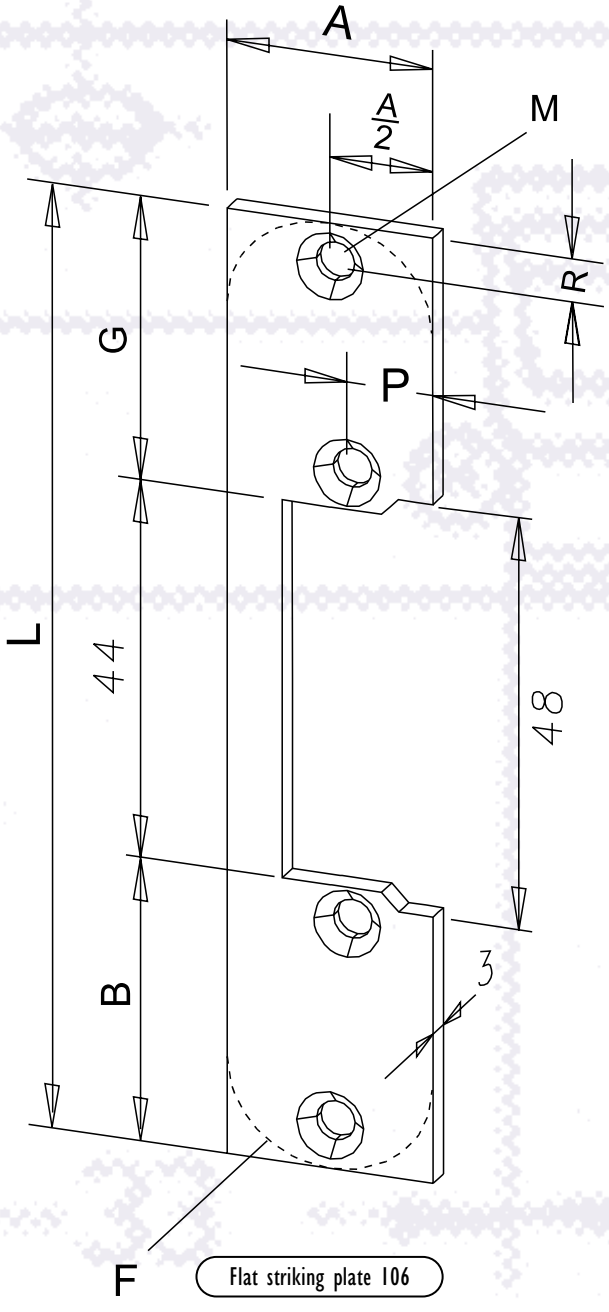

Flat striking plate 106

SHORT STRIKING PLATES WITH 2 FIXING HOLES

Standard see technical drawing left

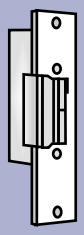

	No.		106	096	098	103	120	123	128	293	403	121	126	185	173
ORDER DATA	Surface finishes*	Stainless steel	35	35	35		35				35	35	35		
		Galvanized and ground	40	40	40		40								
		Polished brass													
		Yellow chromated													
		Gold-coloured	01	01	01		01								
		Grey	02	02	02	02	02	02	02	02				02	02
		Black													
		White													
SPECIFICATIONS	Dimensions	A	24	24	24	25	25	24	24	24	24	24	24	24	24
		B	33	43	22	44,5	50	43	44,5	42	58	58	48	28	48
		C													
		D													
		E													
		F	No	No	No	No	No	No	No	No	No	12	12	12	12
		G	33	43	64	61,5	66	43	61,5	74	58	58	48	68	48
		H													
		I													
		L	110	130	130	150	160	130	150	160	160	160	140	140	140
		M	4,5 x 7,8	4,3 x 8	5,3 x 8	4,3 x 8	5,3 x 8	4,3 x 8	4,3 x 7,8	5,3 x 8	5,3 x 10	5,3 x 10	5,3 x 0	5,3 x 10	5,3 x 10
		"M" countersunk on both sides	No	No	Yes	No	Yes	No	No	Yes	No	No	No	No	No
		O													
		P	10	10,2	10,2	11	11	10,2	11	11	11	11	10,2	10,2	10,2
		R	5	4	4,5	7	7	4	4	7	7	7	7	7	7
		S													
		T													
		U													
		V													
		X													
		DIN orientation required												x	
	Strike model	14 UNI		x				x							x
		14 DIN... (right-hand GRM)				x	x			x					
		14RR DIN				x	x			x					
		17, 116 UNI	x	x		x	x	x		x					x
		17RR, 116RR UNI		x		x	x	x		x					x
		9334, 934									x	x			
		9134, 914											x		
		142 DIN		x		x	x	x		x					x
		142RR DIN				x	x			x					
		145 DIN			x									x	
	Special features								For Model 9014, 9034						

* For more **information** on **surface finishes** see from page 236

Order data strike model from page 36 ➔➔

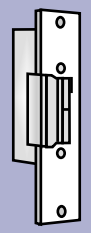

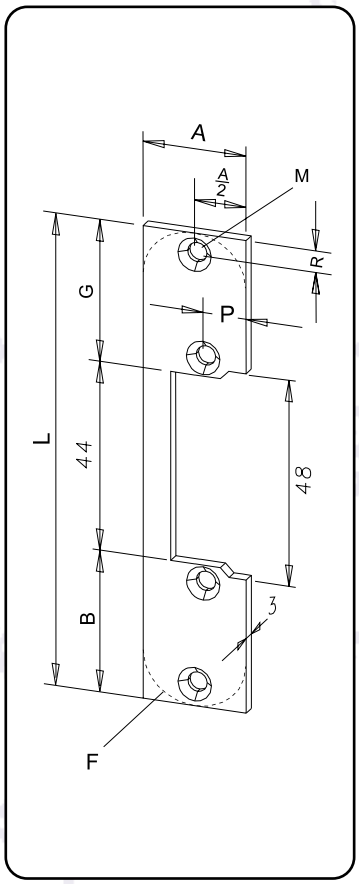

Flat striking plate 106

As a mating component for latch bolt locks without dead bolt, for example in glass doors, short flat striking plates are used. These can be used with models 34 in combination with our latch bolt locks 802 and 807, also as a supplementary fail unlocked locking system. The four fixing holes have proven beneficial with low frame material thicknesses and when fixing using sheet metal screws. For this purpose, compare also the installation example "retrofitting" on page 16.

Key

- A Width of the striking plate
- B Distance from the keep aperture to the dead bolt aperture. With KL, kF, KiW, distance from keep aperture to bottom edge of striking plate
- G Distance from upper edge of striking plate to keep aperture
- L Overall length of the striking plate
- M Dimensions of fixing holes
- P Distance of door fixing hole to upper edge of striking plate
- R Distance of the striking plate fixing hole to upper edge (lower edge) of striking plate

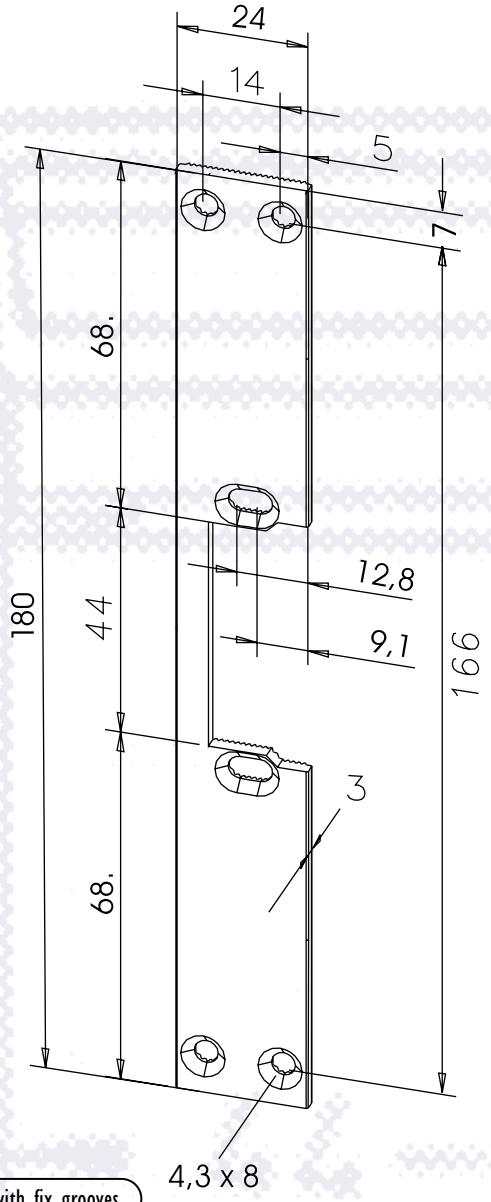

Flat striking plate 457 with fix grooves

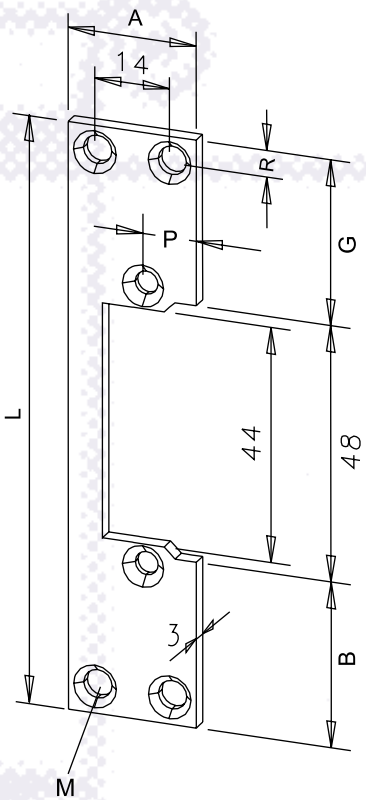

Flat striking plate 107

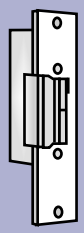

Standard see technical drawing left

ORDER DATA	No.		457		107	920	436
	Surface finishes*	Stainless steel					35
		Galvanized and ground			40	40	
		Polished brass					
		Yellow chromated					
		Gold-coloured					
		Grey	02		02		
		Black					
		White					
SPECIFICATIONS	Dimensions	A			24	24	25
		B			33	33	42
		C					
		D					
		E					
		F					
		G			33	33	64
		H					
		I					
		L			110	110	150
		M			5,3 x 8	5,3 x 8	4,3 x 8
		N					
		O					
		P			10	10	11
		R			5	8	7
		S					
		T					
		U					
		V					
		X					
		DIN orientation required					x
	Strike model	14 Fix UNI	x				
		14 Fix DIN... (right-hand GRM)	x				x
		14RR Fix DIN	x				x
		17, 116 UNI			x	x	
		17RR, 116 RR UNI					
		19 UNI					
		19 DIN					
		142 Fix DIN	x				x
		142RR Fix DIN	x				x
	Special features						

* For more **information** on **surface finishes** see from page 236

Order data strike model from page 36 ➔➔

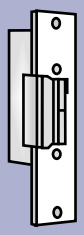

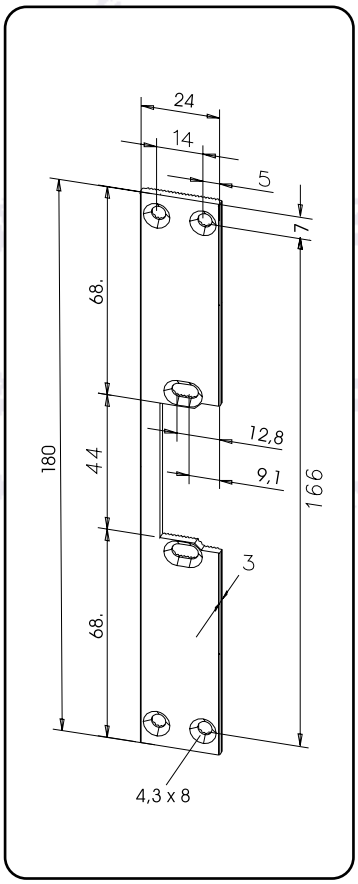

Flat striking plate 457 with fix grooves

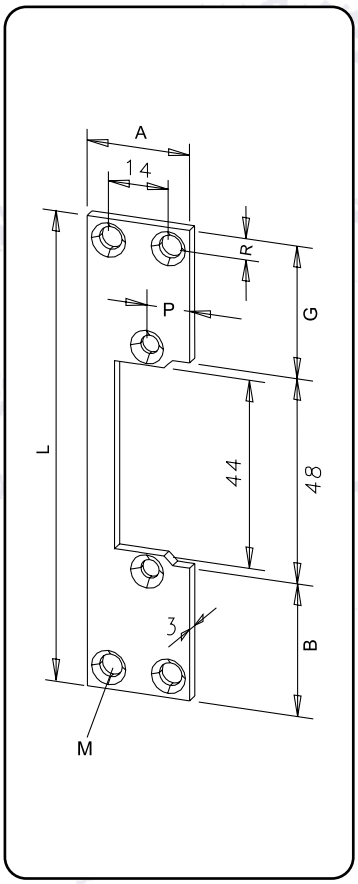

Flat striking plate 107

As a mating component for latch bolt locks without dead bolt, for example in glass doors, short flat striking plates are used. These can be used with model 34 in combination with our latch bolt locks 802 and 807, also as a supplementary fail unlocked locking system. The two fixing holes are suitable for a system using mounting plates SET_LA-M5---00 and SET-LA-M4---00 for flush mounting. Also compare the metal door mounting example on pages 12 and 14. effeff offers a varied range of striking plates specifically for strikes with FIX grooves. The FIX adjusting function is described on page 237.

Key

- B Distance from the keep aperture to the dead bolt aperture. With KL, kF, KiW, distance from keep aperture to bottom edge of striking plate
- F Radius at the 4 striking plate corners
- G Distance from upper edge of striking plate to keep aperture
- L Overall length of the striking plate
- M Dimensions of fixing holes
- R Distance of the striking plate fixing hole to upper edge (lower edge) of striking plate

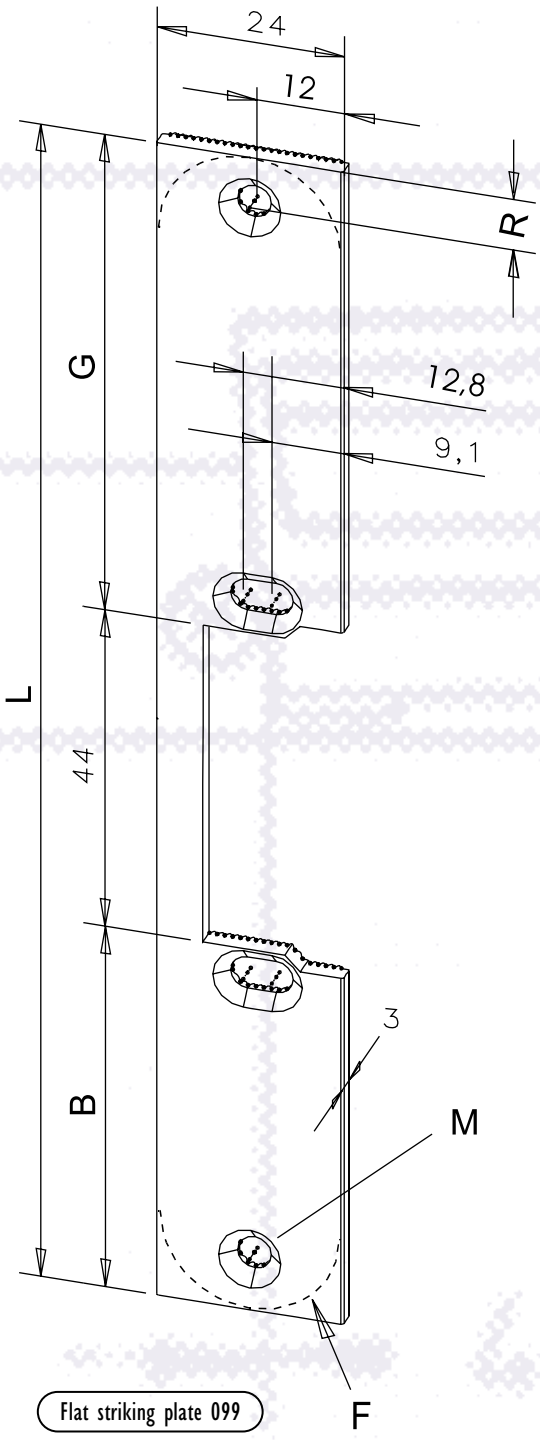

Flat striking plate 099

SHORT STRIKING PLATES WITH 2 FIXING HOLES

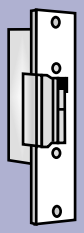

Standard see technical drawing left

ORDER DATA	No.		099	151	178	153	155	154	152	157	184	910	150
	Surface finishes*	Stainless steel		35	35		35	35	35				
		Galvanized and ground		40					40			40	40
		Polished brass											
		Yellow chromated											
		Gold-coloured		01					01				
		Grey	02	02		02	02	02	02	02	02		
		Black											
		White											
SPECIFICATIONS	Dimensions	A											
		B	50	43	58	43	48	48	22	63	28	63	22
		C											
		D											
		E											
		F	No	No	No	No	No	No	No	12	12	12	No
		G	66	43	58	43	48	68	64	63	68	63	64
		H											
		I											
		L	160	130	160	130	140	160	130	170	140	170	130
		M	4,3 x 8	4,3 x 8	5,3 x 9,5	4,3 x 7,3	5,3 x 10	5,3 x 10	4,3 x 8	5,2 x 9,1	5,3 x 10	5,3 x 10	4,3 x 8
		N											
		O											
		P											
		R	7	4,5	7	4	7	7	4	7	7	13	4,5
		S											
		T											
		U											
		V											
		X											
		DIN orientation required							x		x		x
	Strike model	14 Fix UNI	x	x	x	x	x	x			x	x	
		14 Fix DIN (right-hand GRM)											
		14RR Fix DIN	x		x					x		x	
		142 Fix DIN	x		x					x		x	
		142RR Fix DIN	x		x					x		x	
		12wd Fix	x		x				x	x	x	x	
		12wdE Fix											x
		12wdRR Fix	x		x				x	x	x	x	
		14S Fix							x		x		
	Special features												

* For more **information** on **surface finishes** see from page 236

Order data strike model from page 36 ➔➔

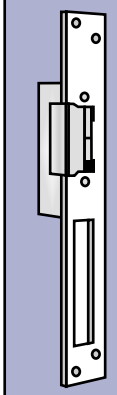

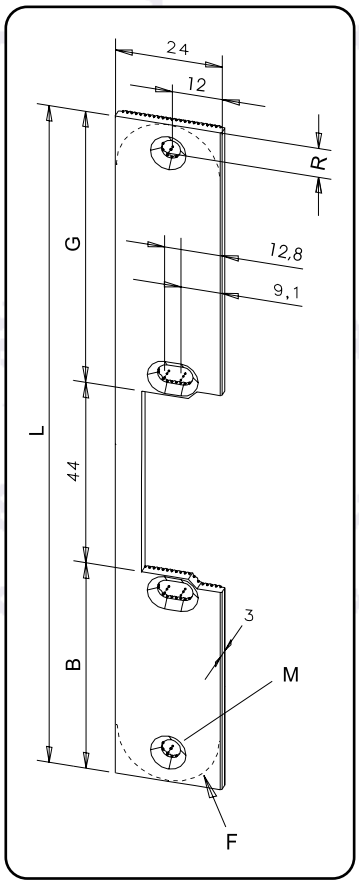

Flat striking plate 099

In flush fitting doors in which the lock is symmetrically positioned (outside, inside) in the door leaf, the distance from the stop edge to the lock-in position of the latch bolt in the strike must be bridged by striking plates with keep guide. Please always order the combination of strike and striking plate as a complete unit. When ordering the components separately, add the abbreviation "St" for adjusting screw to the model designation (digits 1 - 7). Correct adjustment takes place during mounting.

Key

- B Distance from the keep aperture to the dead bolt aperture. With KL, kF, KiW, distance from keep aperture to bottom edge of striking plate
- C Height of dead bolt aperture
- D Width of dead bolt aperture
- G Distance from upper edge of striking plate to keep aperture
- L Overall length of the striking plate
- M Dimensions of fixing holes
- I Striking plate thickness

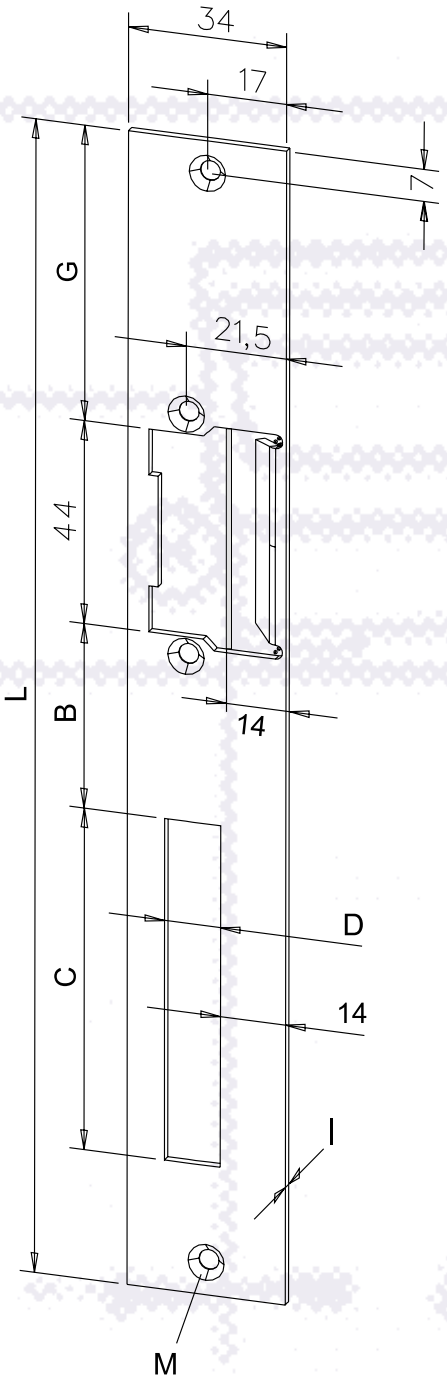

Flat striking plate 033

FLAT STRIKING PLATES

WITH KEEP STANDARD
2 FIXING HOLES

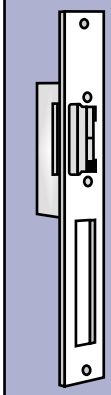

Standard see technical drawing left

ORDER DATA	No.		033	034	851	282
	Surface finishes*	Stainless steel	35	35	35	
		Galvanized and ground				40
		Polished brass				
		Yellow chromated				
		Gold-coloured	01			
		Grey	02	02		
		Black				
		White				
SPECIFICATIONS	Dimensions	A				
		B	40	45	40	42
		C	74	74	45	74
		D	12	12	11	12
		E				
		F				
		G	64	64	64	94
		H				
		I	2	2	2	3
		L	250	250	250	280
		M	4,3 x 7,8	4,3 x 7,8	4,3 x 8	5,3 x 10,4
		N				
		O				
		P				
		R				
		S				
		T				
		U				
		V				
		X				
		DIN orientation required	x	x	x	x
	Strike model	14 UNI	x	x	x	x
		14 DIN... (right-hand GRM)	x	x	x	x
		14RR DIN	x	x	x	x
		17, 116 UNI				
		17RR, 116RR UNI				
		19 UNI				
		19 DIN				
		142 DIN	x	x	x	x
		142RR DIN	x	x	x	x
	Special features				Prepared for model 878	

* For more **information** on **surface finishes** see from page 236

Order data strike model from page 36 ➔➔

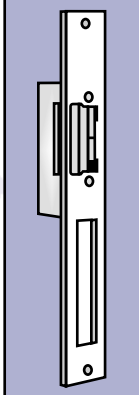

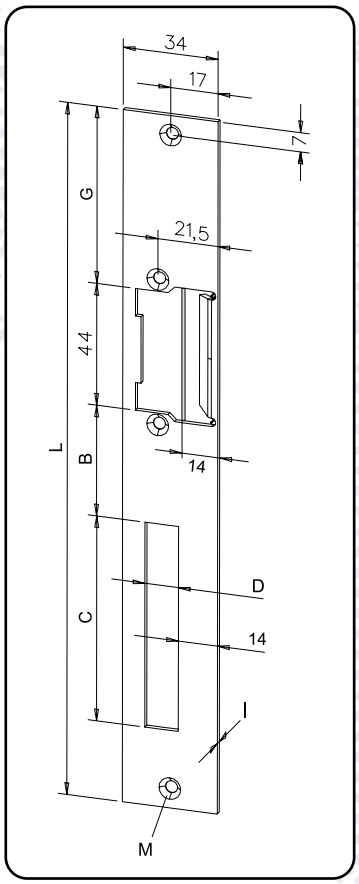

Flat striking plate 033

By using striking plates with keep guide, in flush fitting doors whose lock is symmetrically positioned (outside, inside) in the door leaf, the distance from the stop edge to the lock-in position of the latch bolt in the strike is bridged. The flange can be shortened if required. In this case, effeff recommends using the stainless steel version. Please always order the combination of strike and striking plate as a complete unit. When ordering the components separately, add the abbreviation "St" for adjusting screw to the model designation (digits 1 - 7). Correct adjustment takes place during mounting.

Key

- B Distance from the keep aperture to the dead bolt aperture. With KL, kF, KiW, distance from keep aperture to bottom edge of striking plate
- C Height of dead bolt aperture
- D Width of dead bolt aperture
- E Distance from dead bolt aperture to front edge of striking plate
- L Overall length of the striking plate
- T Flange width

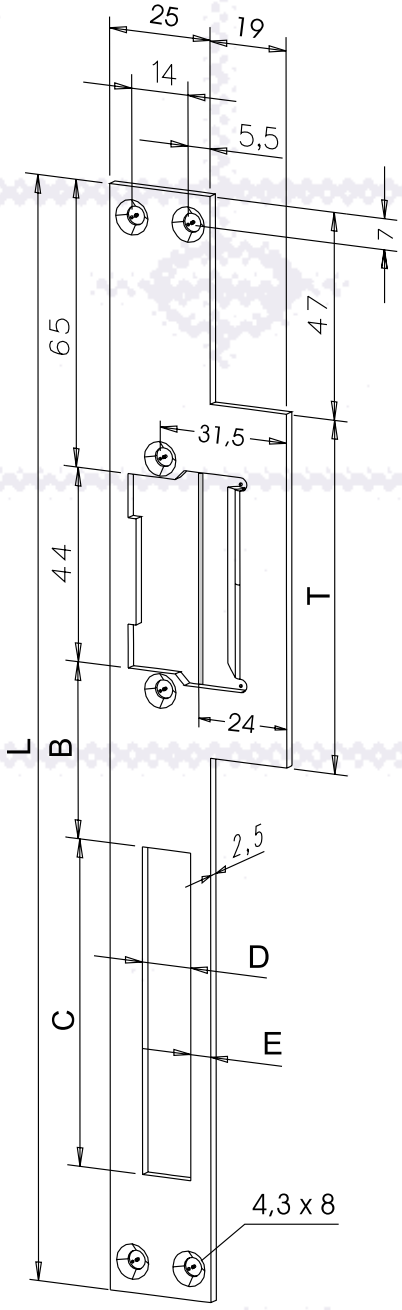

Flat striking plate 165

FLAT STRIKING PLATES

WITH KEEP AND FLANGE
4 FIXING HOLES

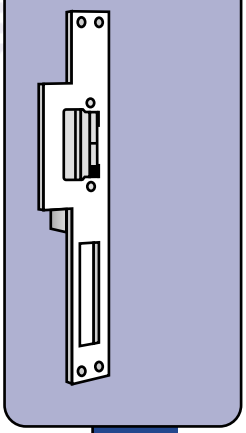

Standard see technical drawing left

	No.		165	166	168	314
ORDER DATA	Surface finishes*	Stainless steel	35	35		
		Galvanized and ground				
		Polished brass	31			
		Yellow chromated				
		Gold-coloured	01		01	01
		Grey	02			
		Black				
		White				
SPECIFICATIONS	Dimensions	A				
		B	40	40		11
		C	74	74		58
		D	12	12		12
		E	5	5		5
		F				
		G				
		H				
		I				
		L	250	250	250	200
		M				
		N				
		O				
		P				
		R				
		S				
		T	80	80	80	100
		U				
		V				
		X				
		DIN orientation required	x	x	x	x
	Strike model	14 UNI	x		x	
		14 DIN... (right-hand GRM)				
		14RR DIN				
		14S DIN				x
		17, 116 UNI				
		17RR, 116RR UNI				
		12E		x		
		142 DIN	x		x	
		142RR DIN	x		x	
	Special features				Without dead bolt aperture	

* For more **information** on **surface finishes** see from page 236

Order data strike model from page 36 ➔➔

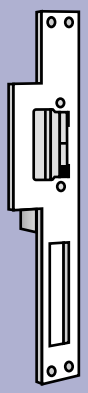

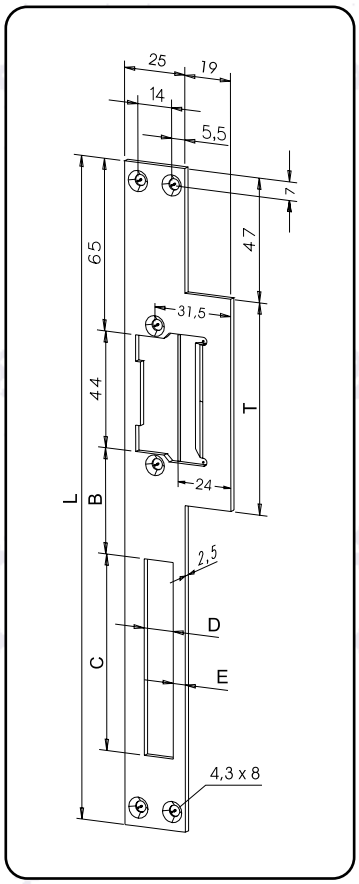

Flat striking plate 165

As a mating component for latch bolt locks without dead bolt, for example in glass doors, short flat striking plates are used. These can be used with model 34 in combination with our latch bolt locks 802 and 807, also as a supplementary fail unlocked locking system. In flush fitting doors in which the lock is symmetrically positioned (outside, inside) in the door leaf, the distance from the stop edge to the lock-in position of the latch bolt in the strike must be bridged by striking plates with keep guide. Please always order the combination of strike and striking plate as a complete unit. When ordering the components separately, add the abbreviation "St" for adjusting screw to the model designation (digits 1 - 7). Correct adjustment takes place during mounting.

Key

B Distance from the keep aperture to the dead bolt aperture. With KL, kF, KiW, distance from keep aperture to bottom edge of striking plate

G Distance from upper edge of striking plate to keep aperture

L Overall length of the striking plate

M Dimensions of fixing holes

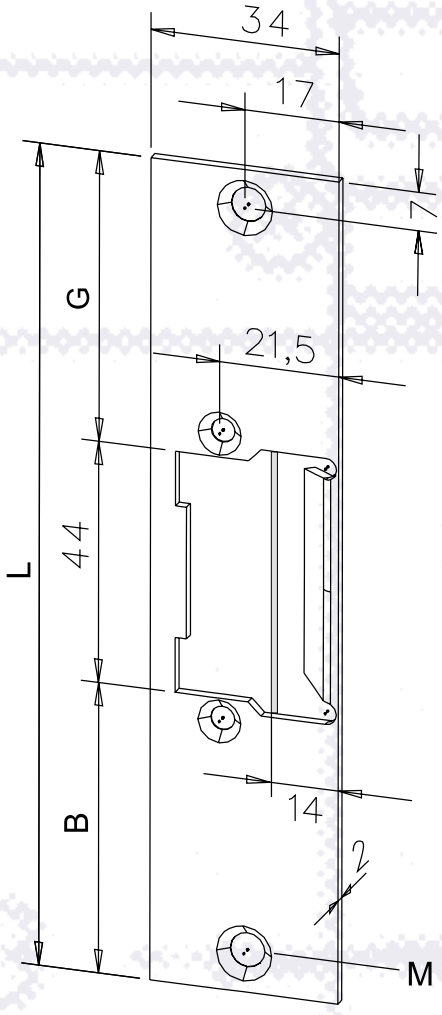

Flat striking plate 262

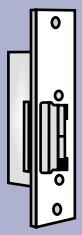

Standard see technical drawing left

ORDER DATA	No.		262	271	286
	Surface finishes*	Stainless steel	35	35	35
		Galvanized and ground	40	40	40
		Polished brass			
		Yellow chromated			
		Gold-coloured			
		Grey	02	02	02
		Black			
		White			
SPECIFICATIONS	Dimensions	A			
		B	53	29	53
		C			
		D			
		E			
		F			
		G	53	61	68
		H			
		I			
		L	150	134	165
		M	6,2 x 10	6 x 10	6 x 10
		N			
		O			
		P			
		R			
		S			
		T			
		U			
		V			
		X			
		DIN orientation required		x	x
	Strike model	14 UNI	x		
		14 DIN... (right-hand GRM)			x
		14RR DIN			x
		14S DIN		x	
		17, 116 UNI			
		17RR, 116RR UNI			
		142 DIN			x
		142RR DIN			x
	Special features				

* For more **information** on **surface finishes** see from page 236

Order data strike model from page 36 ➔➔

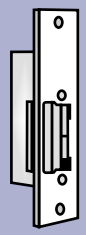

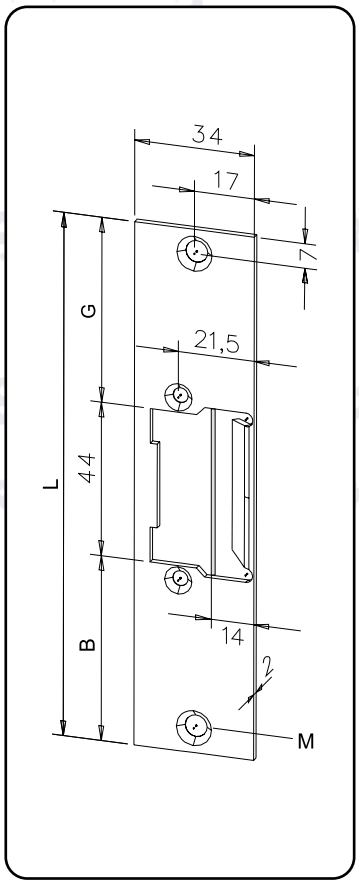

Flat striking plate 262

In flush fitting doors in which the lock is symmetrically positioned (outside, inside) in the door leaf, the distance from the stop edge to the lock-in position of the latch bolt in the strike should ideally be bridged by striking plates with keep guide. The flange can be shortened if required. In this case, effeff recommends using the stainless steel version. The two fixing holes are suitable for a system using mounting plates SET_LA-M5---00 and SET-LA-M4---00 for flush mounting. Also compare the metal door mounting example on page 12.

Key

- A Width of the striking plate
- B Distance from the keep aperture to the dead bolt aperture. With KL, kF, KiW, distance from keep aperture to bottom edge of striking plate
- C Height of dead bolt aperture
- D Width of dead bolt aperture
- E Distance from dead bolt aperture to front edge of striking plate
- F Radius at the 4 striking plate corners
- G Distance from upper edge of striking plate to keep aperture
- I Striking plate thickness
- L Overall length of the striking plate
- M Dimensions of fixing holes
- P Distance from striking plate fixing hole to front edge of striking plate
- R Distance of the striking plate fixing hole to upper edge (lower edge) of striking plate
- S Distance from upper edge of striking plate to flange
- T Flange width
- U Lap projection beyond striking plate
- X Distance from striking plate edge to keep engagement in striking plates with keep guide

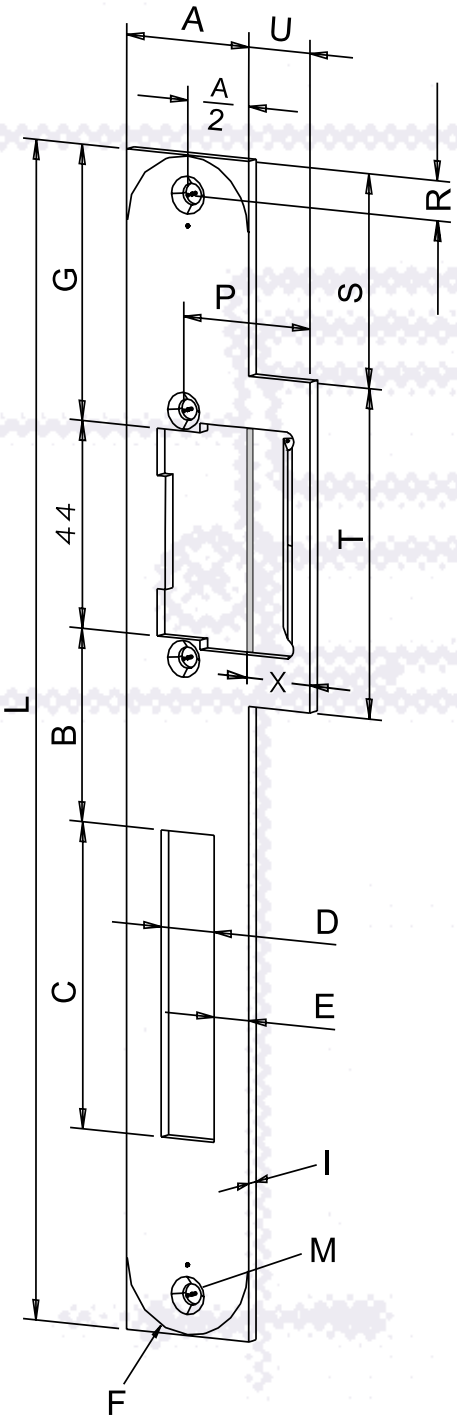

Flat striking plate 405

FLAT STRIKING PLATES

WITH KEEP GUIDE AND FLANGE
2 FIXING HOLES

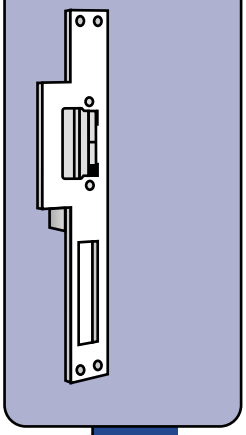

Standard see technical drawing left

	No.		405	310	425	912	142	472	039
ORDER DATA	Surface finishes*	Stainless steel		35	35		35	35	35
		Galvanized and ground	40			40			
		Polished brass							
		Yellow chromated							
		Gold-coloured							
		Grey							
		Black							
		White							
SPECIFICATIONS	Dimensions	A	30	24	25	30	24	24	30
		B	41	40	40	41,5	47	53	41
		C	65	74	74	65	56	50	65
		D	13	12	12	13	12	12	13
		E	8,5	6	5	8,5	6	6	8,5
		F	No	No	No	No	12	12	12
		G	58,5	65	65	62,5	49,5	49,5	58,5
		H							
		I	3	2,5	2	3	3	3	3
		L	250	250	250	257	270	270	250
		M	4,5 x 8	5,4 x 10,4	6,4 x 10,4	4,5 x 8	5,5 x 10	5,5 x 10	5,5 x 10,4
		N							
		O							
		P	31	29,5	25,5	31	24	24	33
		R	8,5	8	7	12	13	13	8,5
		S	45,5	47	47	49	41,5	41,5	45,5
		T	70	80	80	70	60	60	70
		U	15	18,5	13	15	12	12	17
		V							
		X	23,5	22	18	23,5	16,5	16,5	25,5
		DIN orientation required	x	x	x	x	x	x	x
	Strike model	14 UNI	x	x	x	x	x	x	x
		14 DIN... (right-hand GRM)	x	x	x	x	x	x	x
		14RR DIN	x	x	x	x	x	x	x
		17, 116 UNI							
		17RR, 116RR UNI							
		19 UNI							
		19 DIN							
		142 DIN	x	x	x	x	x	x	x
		142RR DIN	x	x	x	x	x	x	x
	Special features						Prepared for model 878	Prepared for model 878	

* For more **information** on **surface finishes** see from page 236

Order data strike model from page 36 ➔➔

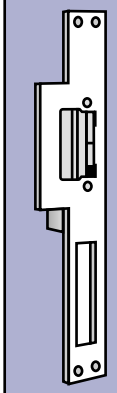

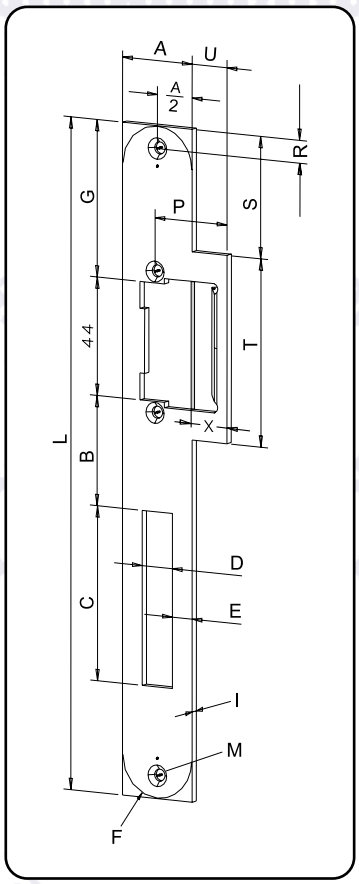

Flat striking plate 405

In flush fitting doors in which the lock is symmetrically positioned (outside, inside) in the door leaf, the distance from the stop edge to the lock-in position of the latch bolt in the strike must be bridged by striking plates with keep guide. Please always order the combination of strike and striking plate as a complete unit. When ordering the components separately, add the abbreviation "St" for adjusting screw to the model designation (digits 1 - 7). Correct adjustment takes place during mounting.

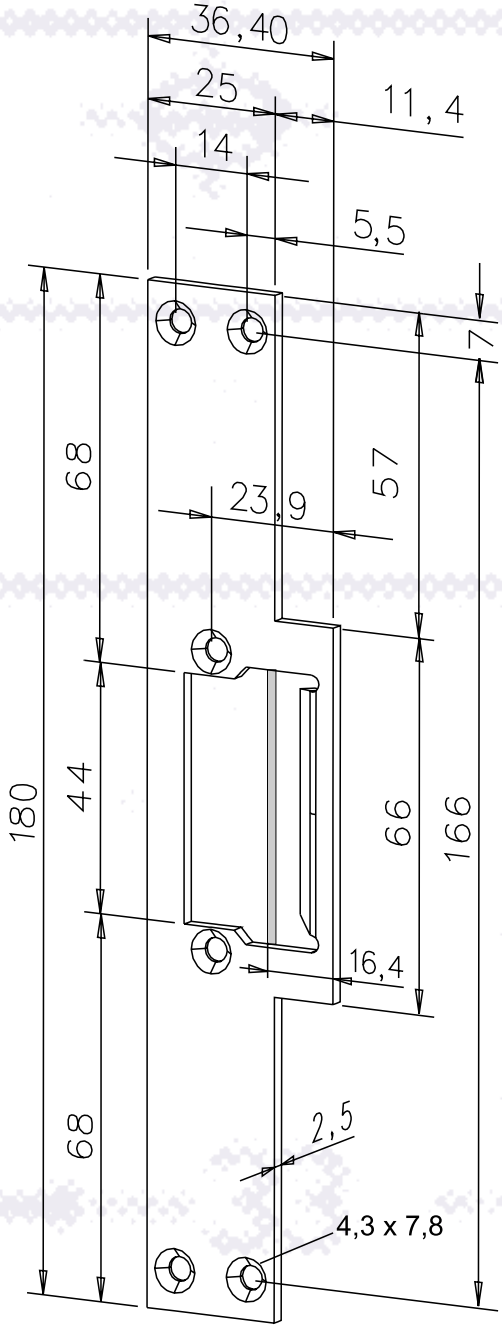

Flat striking plate 169

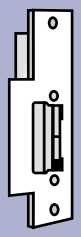

Standard see technical drawing left

ORDER DATA	No.		169
	Surface finishes*	Stainless steel	
		Galvanized and ground	40
		Polished brass	
		Yellow chromated	
		Gold-coloured	01
		Grey	
		Black	
		White	
SPECIFICATIONS	Dimensions	A	
		B	
		C	
		D	
		E	
		F	
		G	
		H	
		I	
		L	
		M	
		N	
		O	
		P	
		R	
		S	
		T	
		U	
		V	
		X	
		DIN orientation required	
	Strike model	14 UNI	x
		14 DIN... (right-hand GRM)	x
		14RR DIN	x
		17, 116 UNI	
		17RR, 116RR UNI	
		19 UNI	
		19 DIN	
		142 DIN	x
		142RR DIN	x
	Special features		

* For more **information** on **surface finishes** see from page 236

Order data strike model from page 36 ➔➔

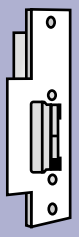

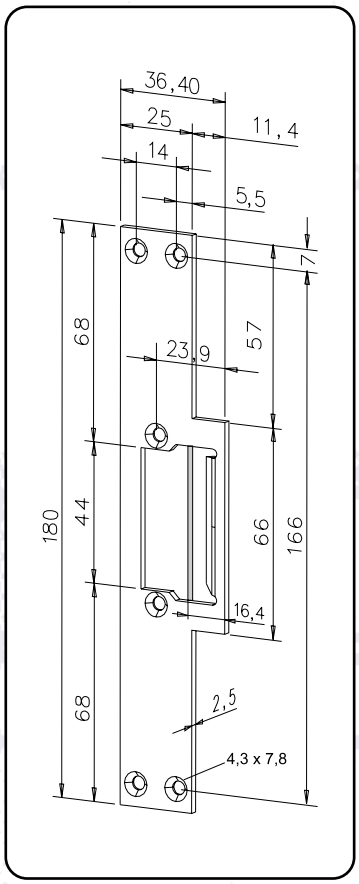

Flat striking plate 169

➔ All striking plates belonging to these series are produced in a material thickness of 3 mm. Their stability and strength make them outstandingly suited for use with these special high-security strikes. The models 003 and 095 are particularly suited for installation of the effeff bolt switch contact (see accessories catalogue).

Model 028 or model 003, which is prepared for use with the bolt switch contact, are used as standard striking plates. In the case of high-security striking plate 024, the length and the twelve fixing holes ensure a positive-locking connection with the frame. The striking plate 116 is predominantly used in conjunction with model series 331 and latch bolt lock 807-10 in escape routes.

Key

B Distance from the keep aperture to the dead bolt aperture. With KL, kF, KiW, distance from keep aperture to bottom edge of striking plate

C Height of dead bolt aperture

D Width of dead bolt aperture

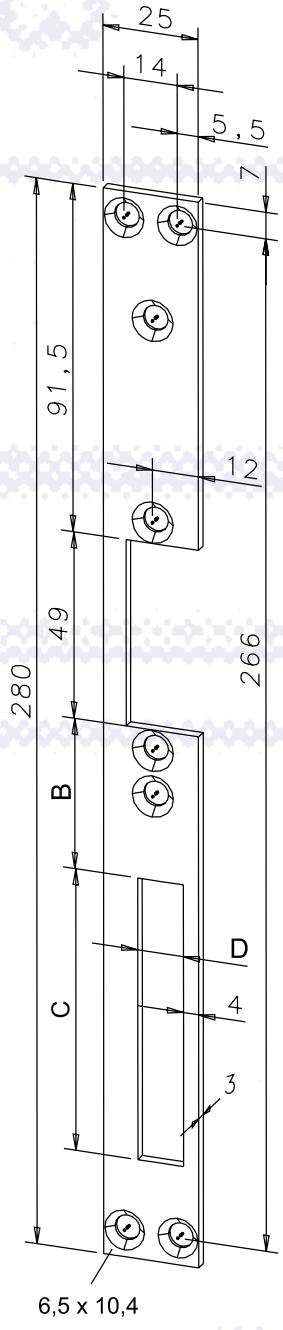

Flat striking plate 028

Flat striking plate 003

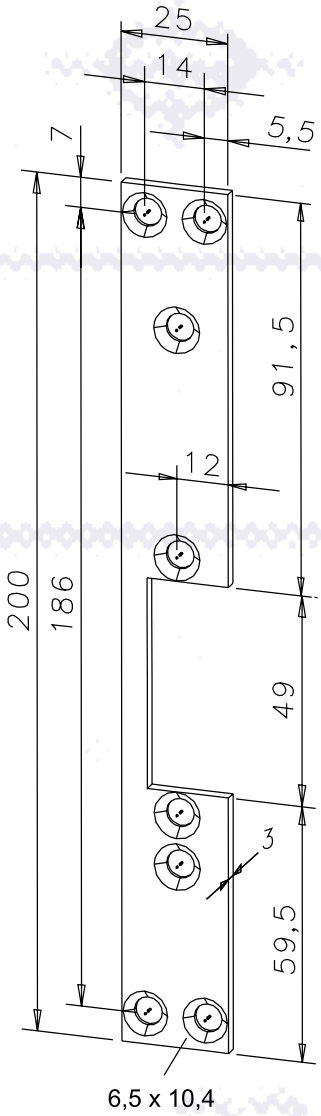

Flat striking plate 116

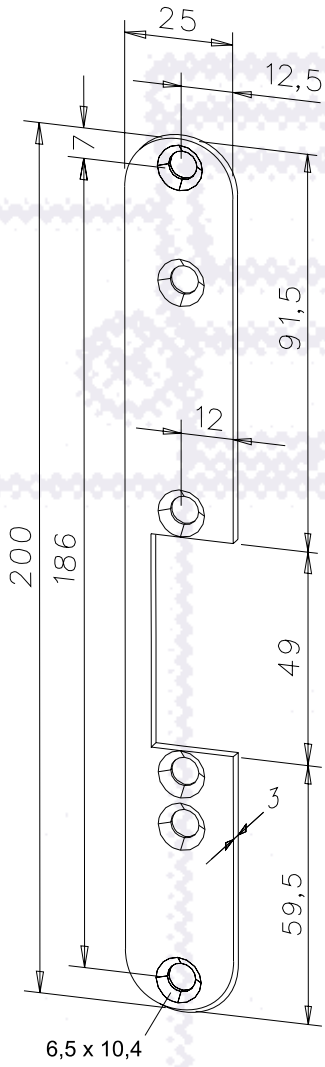

Flat striking plate 972

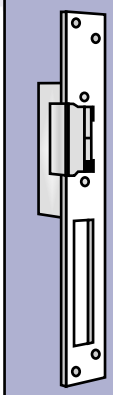

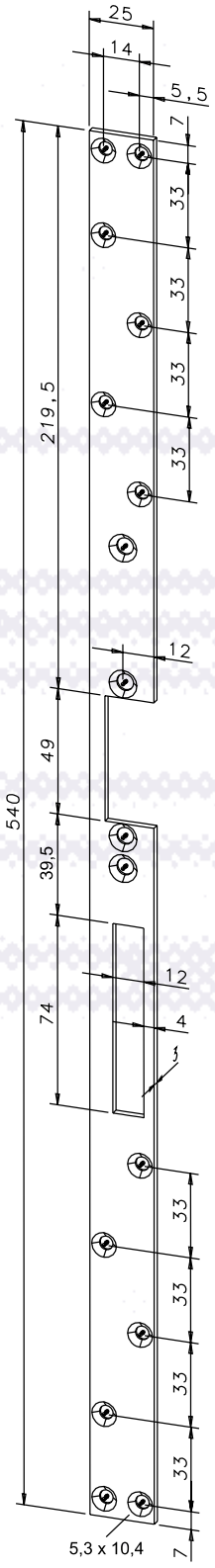

Flat striking plate 024

Standard see technical drawing left

	No.		028	003	116	972	024
ORDER DATA	Surface finishes*	Stainless steel	35	35	35	35	
		Galvanized and ground	40		40		40
		Polished brass					
		Gold-coloured	01				01
		Grey	02		02		02
		Black					
		White					
SPECIFICATIONS	Dimensions	A					
		B	39,5	31			
		C	74	55			
		D	12	13			
		E					
		F					
		G					
		H					
		I					
		L					
		M					
		"M" countersunk on both sides					
		N					
		O					
		P					
		R					
		S					
		T					
		U					
		V					
		X					
		DIN orientation required	x	x	x	x	x
	Strike model	131, 331	x	x	x	x	x
		141	x	x	x	x	x
	Special features			Prepared for bolt switch contact 878			

* For more **information** on **surface finishes** see from page 236

Order data strike model from page 80 ➔➔

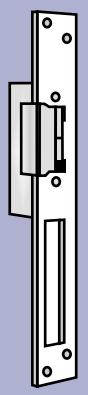

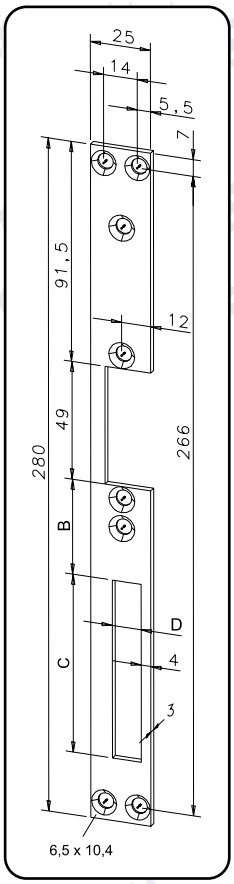

Flat striking plate 028
Flat striking plate 003

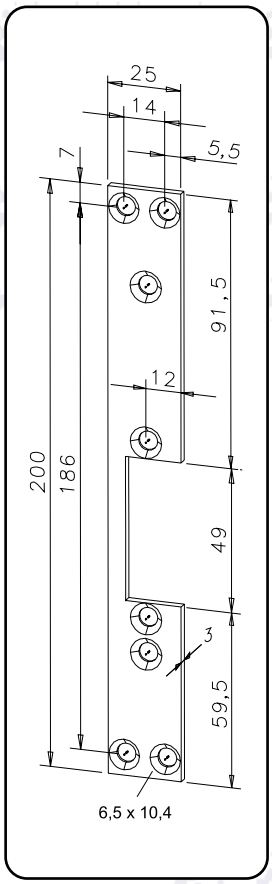

Flat striking plate 116

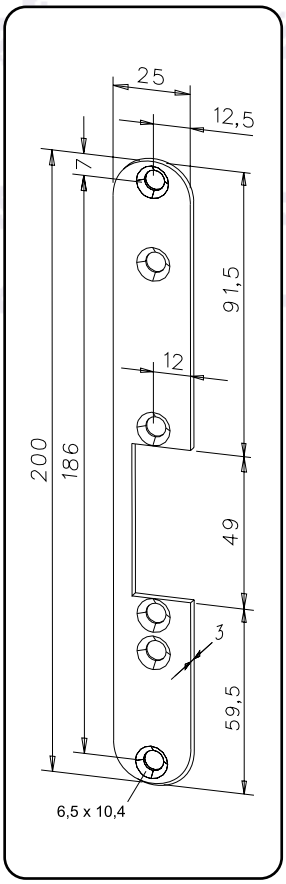

Flat striking plate 972

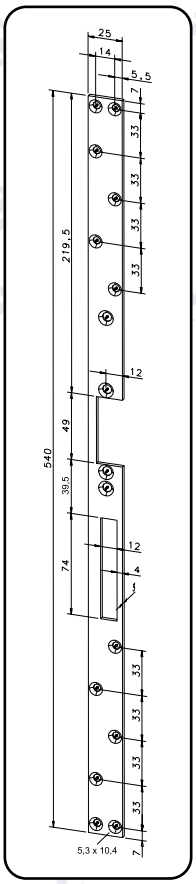

Flat striking plate 024

ANGLED STRIKING PLATES VARIANTS

All striking plates belonging to these series are produced in a material thickness of 3 mm. Their stability and strength make them outstandingly suited for use with these special high-security strikes. The models 003 and 095 are particularly suited for installation of the effeff bolt switch contact (see accessories catalogue).

Model 451 is particularly suitable for use as a standard angled striking plate. In the case of high-security angled striking plate 071, the length and the twelve fixing holes ensure a positive-locking connection with the frame. The striking plate 090 is predominantly used in conjunction with model series 331 and latch bolt lock 807-10 in escape routes.

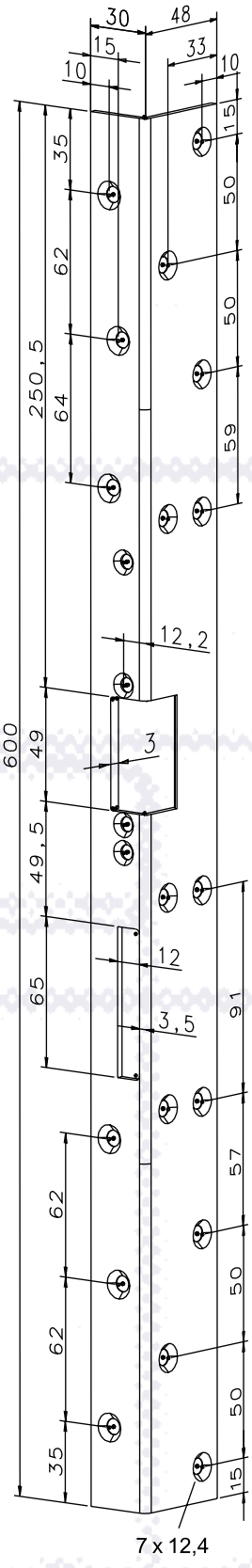

Angled striking plate 071

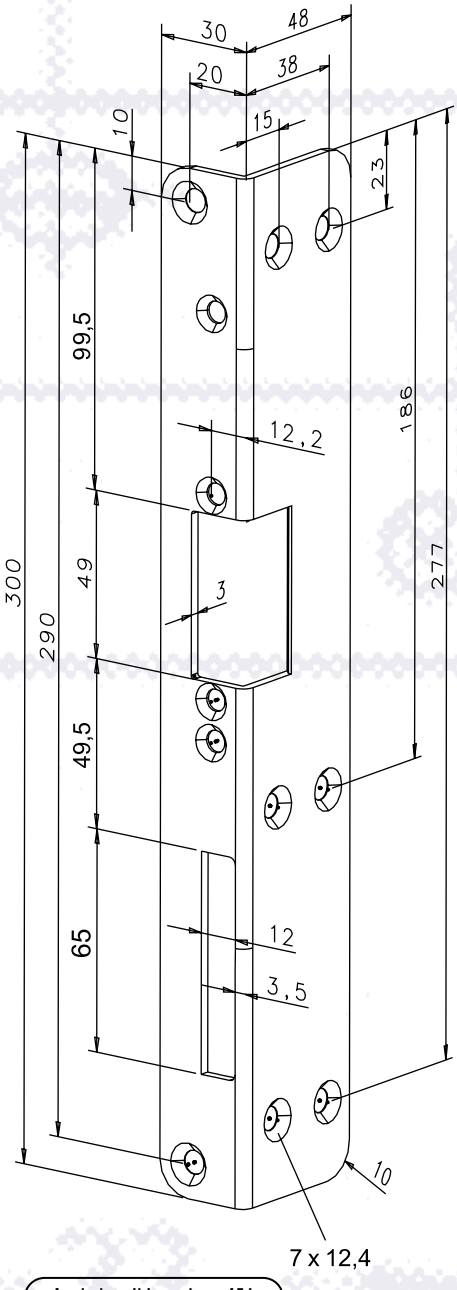

Angled striking plate 451

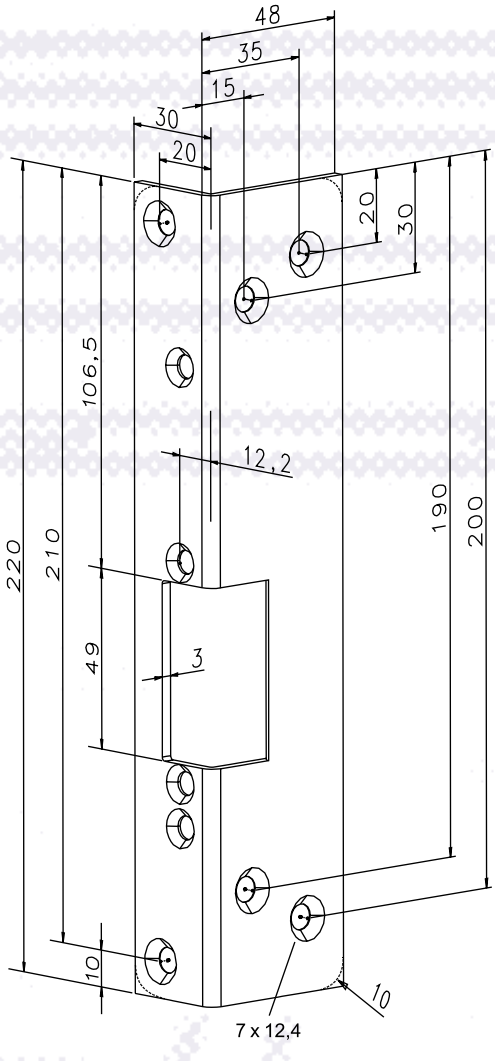

Angled striking plate 090

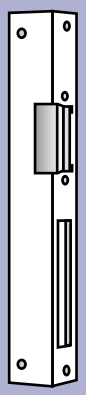

Standard see technical drawing left

	No.		071	451	090	973
ORDER DATA	Surface finishes*	Stainless steel	35		35	35
		Galvanized and ground				
		Polished brass				
		Gold-coloured	01	01		
		Grey	02			
		Black				
		White				
SPECIFICATIONS	Dimensions	A				
		B				
		C				
		D				
		E				
		F				
		G				
		H				
		I				
		L				
		M				
		"M" countersunk on both sides				
		N				
		O				
		P				
		R				
		S				
		T				
		U				
		V				
		X				
		DIN orientation required	x	x	x	x
	Strike model	131/331	x	x	x	x
		141	x	x	x	x
	Special features					

* For more **information** on **surface finishes** see from page 236

Order data strike model from page 80 ➔➔

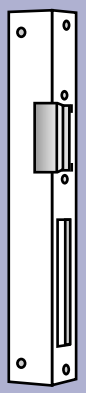

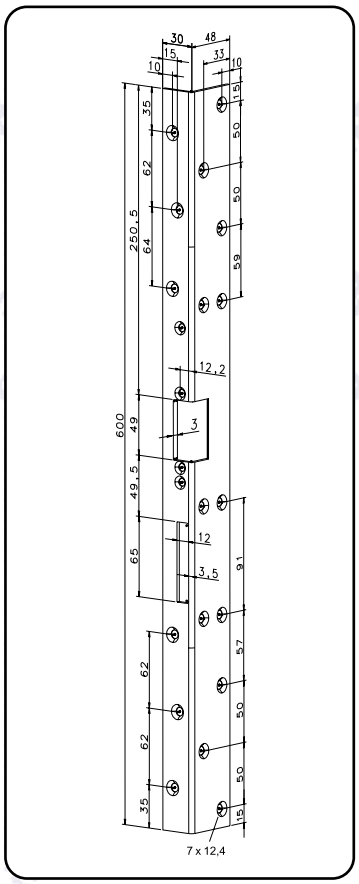

Angled striking plate 071

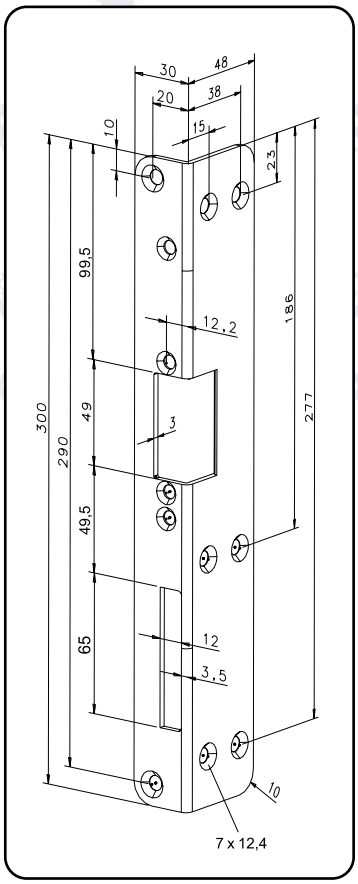

Angled striking plate 451

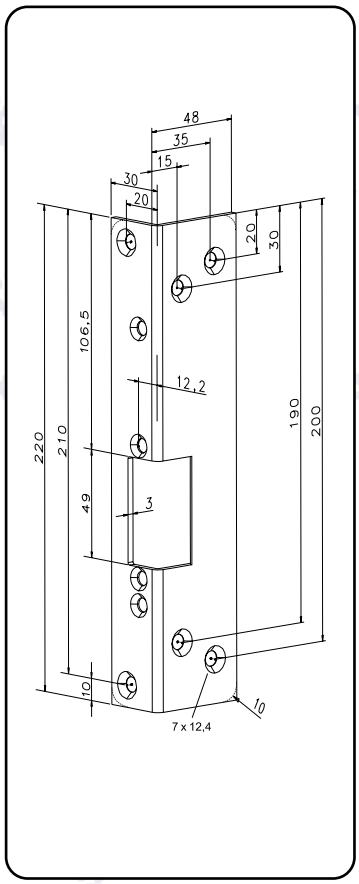

Angled striking plate 090/973

FLAT STRIKING PLATES VARIANTS

➔ All striking plates belonging to these series are produced in a material thickness of 3 mm. Their stability and strength make them outstandingly suited for use with these special high-security strikes. The models 003 and 095 are particularly suited for installation of the effeff bolt switch contact (see accessories catalogue).

In flush fitting doors in which the lock is symmetrically positioned (outside, inside) in the door leaf, the distance from the stop edge to the lock-in position of the latch bolt in the strike must be bridged. This is done using striking plates with keep guide. Strikes used in conjunction with these striking plates are equipped with an adjusting screw for adjusting the opening angle of the keep. Please always order the combination of strike and striking plate as a complete unit.

Key

C Height of the dead bolt aperture

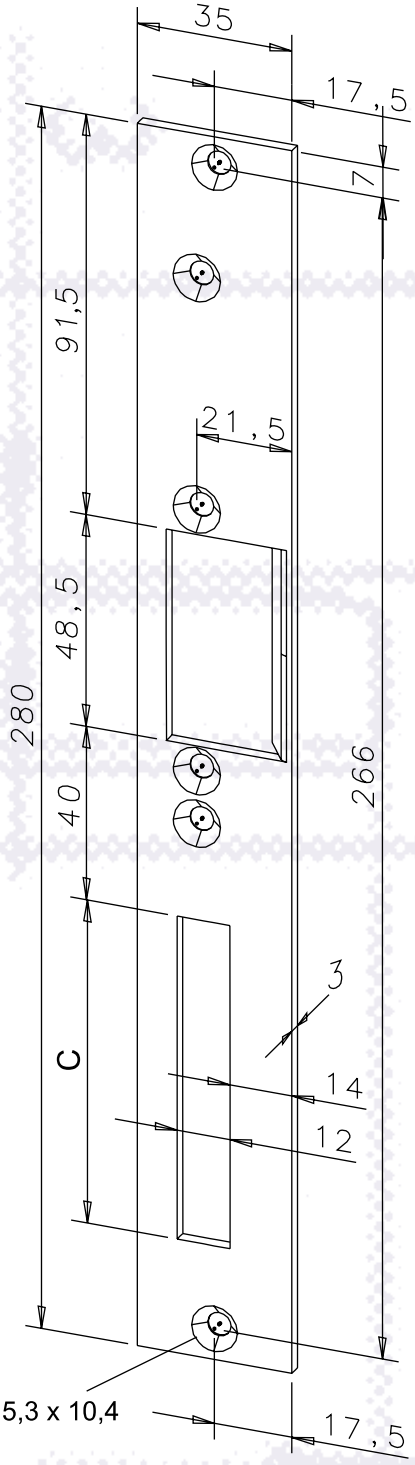

Flat striking plate 031

Flat striking plate 095

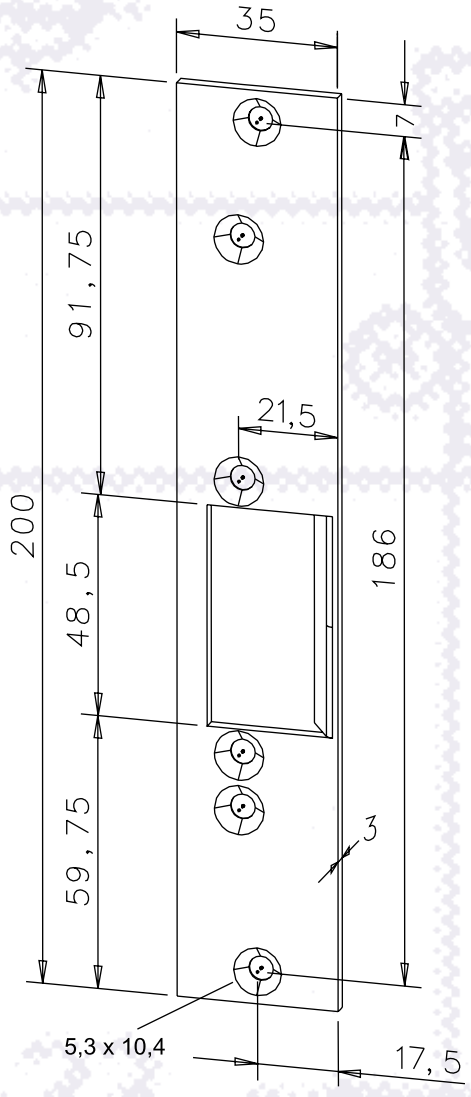

Flat striking plate 030

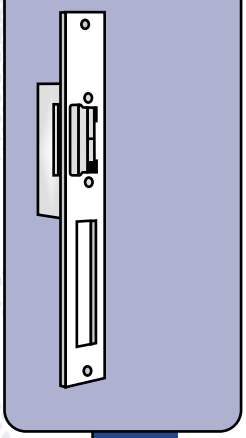

Standard see technical drawing left

ORDER DATA	No.		031	095	030
	Surface finishes*	Stainless steel	35	35	35
		Galvanized and ground	40		40
		Polished brass			
		Gold-coloured			
		Grey			
		Black			
		White			
SPECIFICATIONS	Dimensions	A			
		B			
		C	74	55	
		D			
		E			
		F			
		G			
		H			
		I			
		L			
		M			
		"M" countersunk on both sides			
		N			
		O			
		P			
		R			
		S			
		T			
		U			
		V			
		X			
		DIN orientation required	x	x	x
	Strike model	131/331	x	x	x
		141	x	x	x
	Special features			Prepared for bolt switch contact 878	

* For more **information** on **surface finishes** see from page 236

Order data strike model from page 80 ➔➔

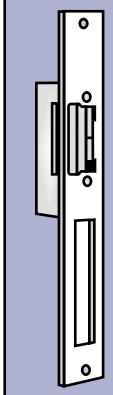

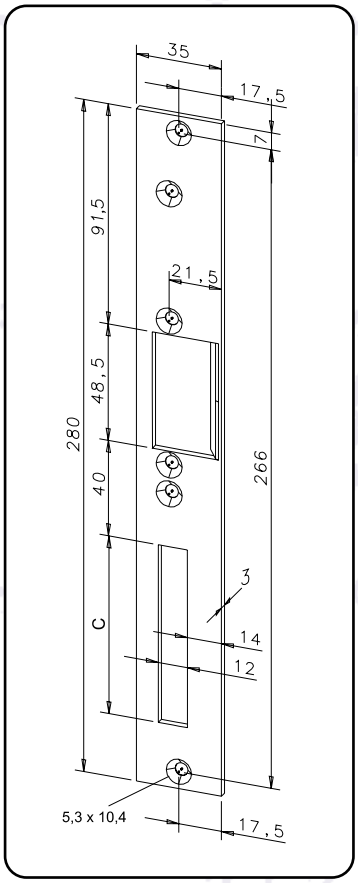

Flat striking plate 031
Flat striking plate 095

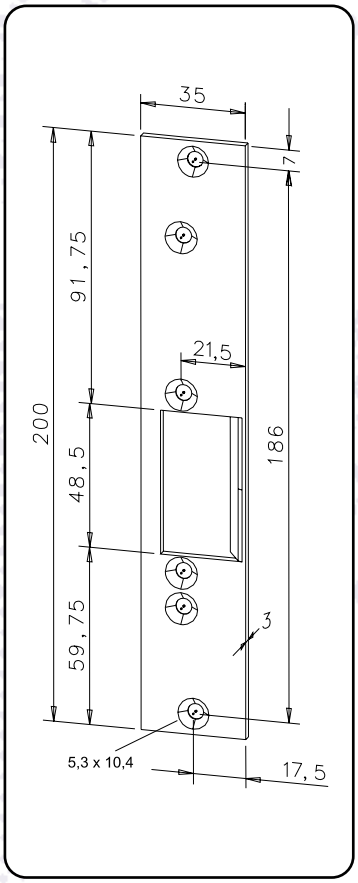

Flat striking plate 030

The optimum solution for installation situations in which technical difficulties or legal regulations prevent flush mounting of electric strikes. By mounting as a supplementary locking system, the door is secured in the entry and exit direction. Particularly suitable for combination with effeff escape route and access control systems.

A01 for metal doors, wooden doors, plastic and aluminium profiles

A02 for glass doors in wooden frames, steel frames, plastic and aluminium profiles

A03 Mounting bracket for A01 and A02 for flush frame-door leaf constructions

Remark: When using fail locked-type strikes, on a power failure the door remains locked without possibility of electrical opening. On the mounting side, it is possible to execute an emergency opening procedure using suitable tools. We recommend when using fail locked-type locking systems operating the system with an emergency power supply. When using fail unlocked strikes, the door remains unlocked in case of a power failure.

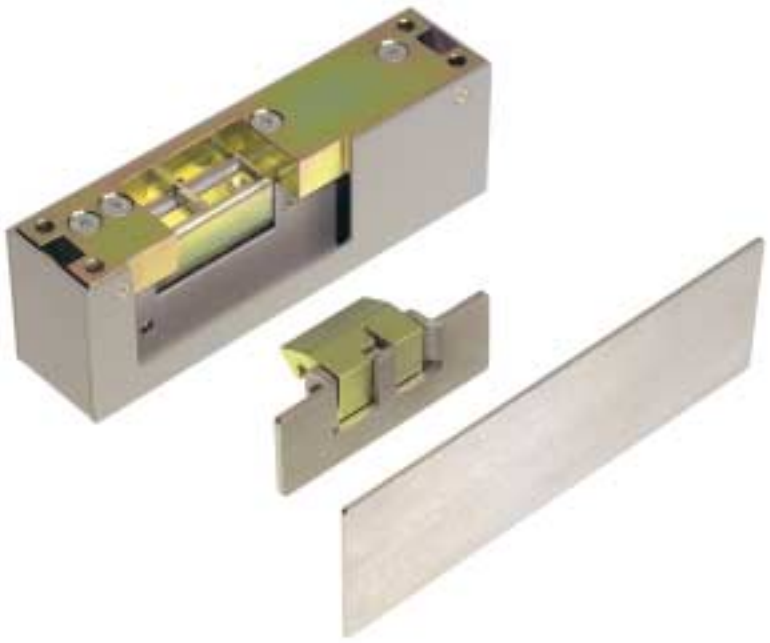

A01

for metal doors, wooden doors, plastic and aluminium profile

Order no. **-------A0102-04**

Always order the matching strike model 131, 141 and 331 with DIN left (4) configuration and in FaFix version (FF).

Dimensions: 165 x 57 x 40 mm
Surface: Powder-coated grey RAL 7037
The delivery comes with the necessary mounting material and a drilling template.

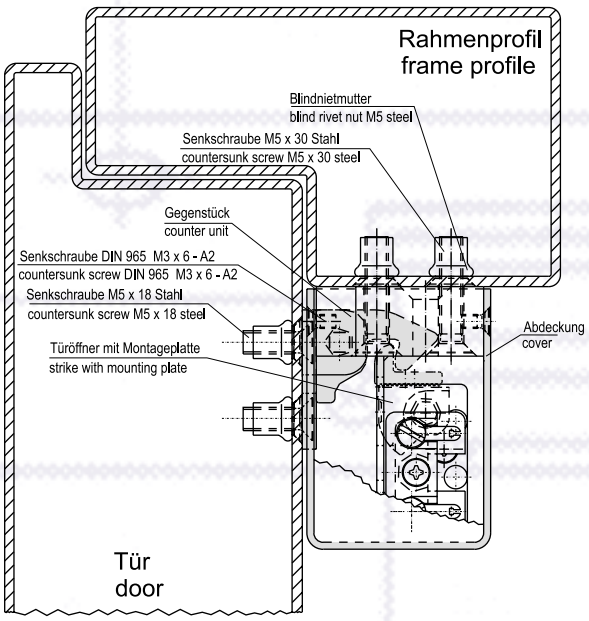

A02

for glass doors in wooden frames, steel frames, plastic and aluminium profiles

Order no. **-------A0202-04**

Always order the matching strike model 131, 141 and 331 with DIN left (4) configuration and in FaFix version (FF).

All dimensions and details correspond to surface-mount housing A01. For correct adhesive mounting, no fixing holes are provided in the mounting surface of the hook catch.

For adhesive mounting, we recommend using adhesive with an adhesive force of at least 300 N/cm2 (e.g. UHU Plus). A dummy panel is included in the delivery to cover the adhesive surface.

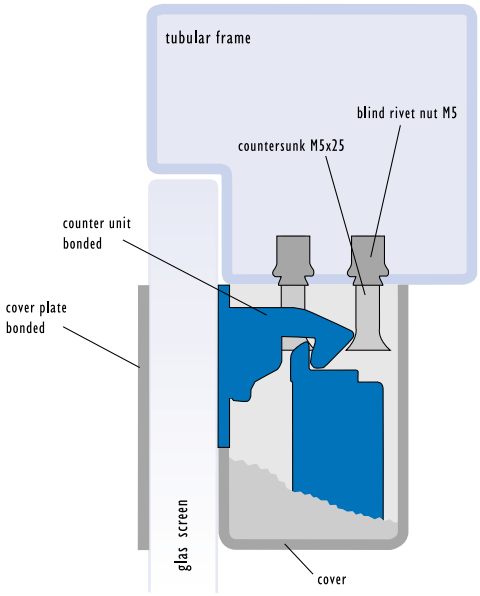

A03

Mounting bracket for A01 and A02 for flush frame-door leaf constructions

Order no. **-------A0302-01**

Dimensions: 165 x 46,5 x 46,5 mm
Surface: Powder coated grey RAL 7037
The delivery comes with the necessary mounting material and a drilling template.

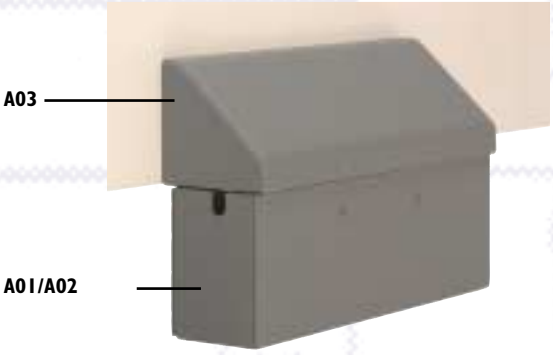

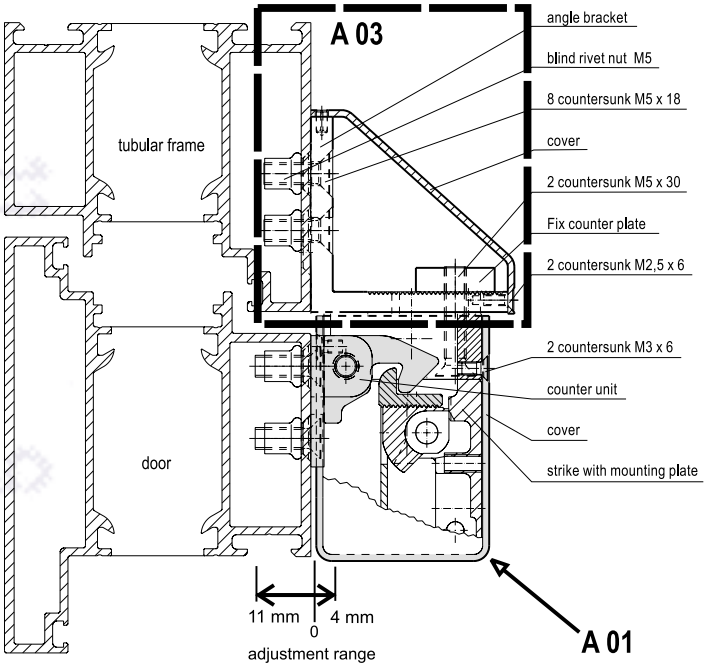

SURFACE-MOUNT HOUSING FOR STANDARD STRIKES OF MODEL SERIES 17, 17RR, 14, 14RR

Order no. surface-mount housing **------19802--1**
former designation KiS

Order no example with strike **17E----19802D11**
former designation 17EkiS 6-12 V

As a mating component to rim-type locks or auxiliary latch bolt model 804 (see accessories catalogue). The optimum solution for installation situations in which technical difficulties or legal regulations prevent flush mounting of electric strikes. By mounting as a supplementary locking system, the door is secured in the entry and exit direction.

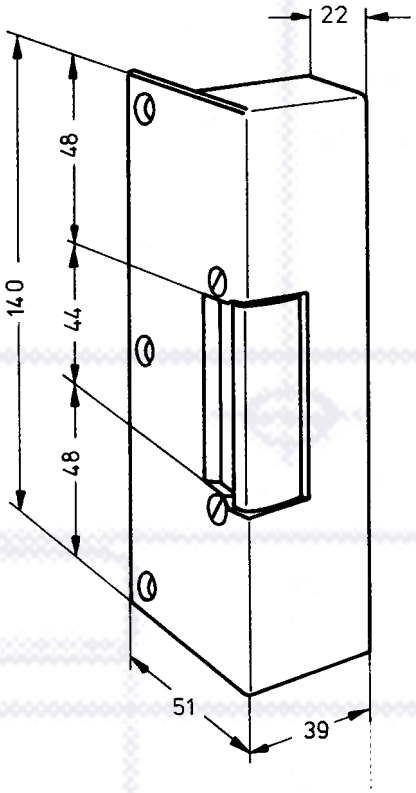

Striking plates are recessed flush into steel frames. For this specific purpose, mounting plates can be used. A wide range of striking plates with a fixing hole for each screw-on side (in the striking plate tables from page 155, 163, 167, 179, 183, 191, 195, 203, 207 described as "Striking plates with two fixing holes") is available for this purpose. The shape of the recess compensates for varying material thicknesses of frames and striking plates. Suitable screws for fixing the mounting plates in the frame and for fixing the striking plate on the mounting plate are included in the delivery.

Order data:

SET-LA-M4----00

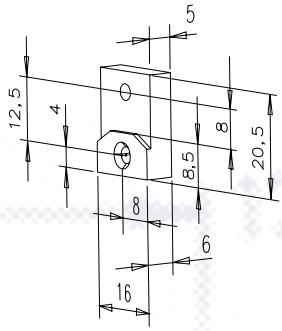

Threaded hole M4

Order data:

SET-LA-M5----00

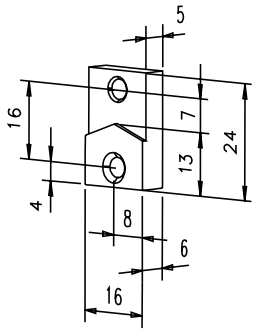

Threaded hole M5

Mounting example for a 3 mm thick striking plate in 2, 3 and 4 mm thick steel frames.

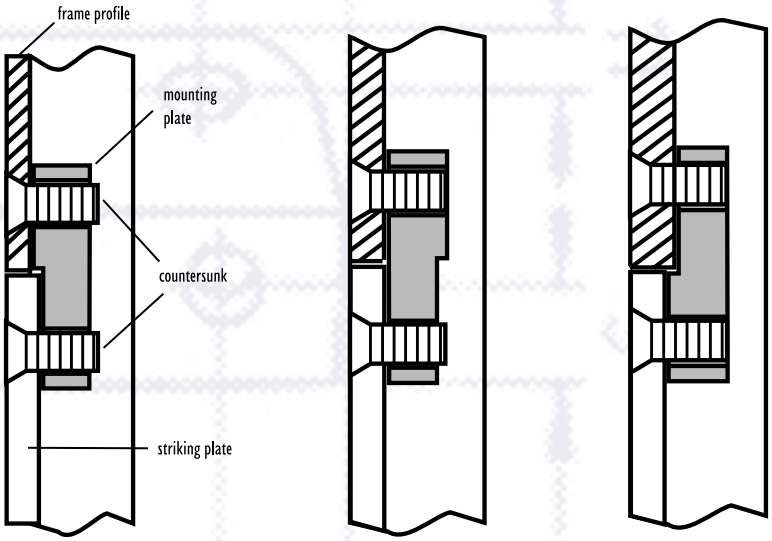

In cases where no electric strike function is required, although the door is prepared to accommodate a striking plate with strike, a dummy component can be used. It is advisable for the front doors of apartments and houses, and also in industrial and office buildings to mount striking plates for strikes. It is possible not only to use the FAFIX adjustment functions from the very beginning, but also in case of a retrofitting requirement to simply exchange a strike for the fitted dummy component. Dummy components can be combined with the matching surface-mounted attachments.

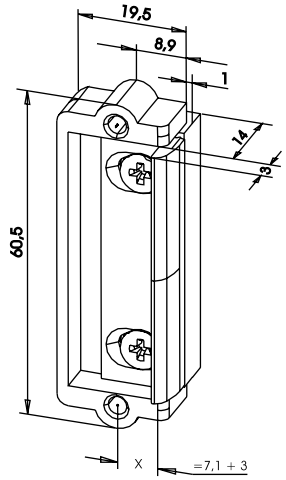

Standard model 1410---------00
with surface-mounted attachment
14.1000011---40
in preparation for model series 14,17,116

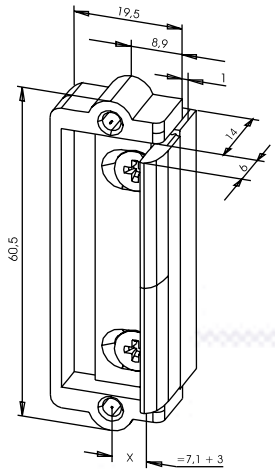

Model 1410-4-------00 with 3 mm protruding keep
with surface-mounted attachment
14.100001103--40
in preparation for model series 14,17,116

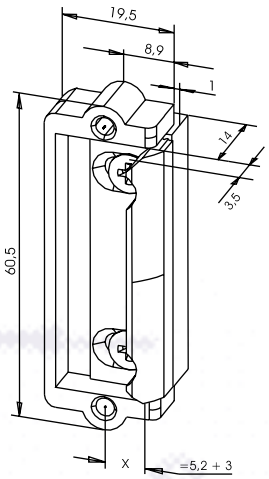

Model 1410-45------00 Adjustment range offset towards non-hinge side
with surface-mounted attachment 14.7610011---40
in preparation for model series 14,17,116

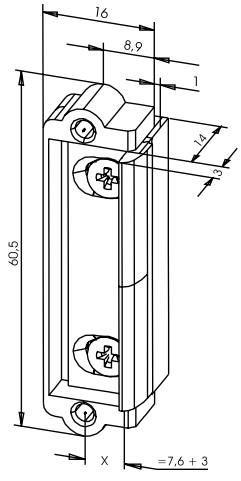

Standard model 1410-14------00
with surface-mounted attachment
14.1000011---40
in preparation for model series 19,119

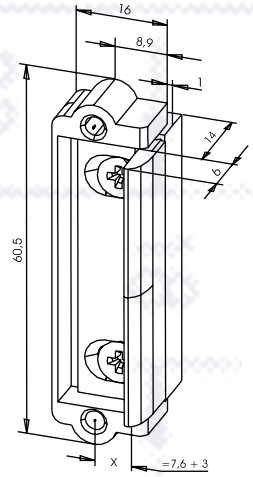

Model 1410-28------00 with 3 mm protruding keep
with surface-mounted attachment
14.100001103--40
in preparation for model series 19,119

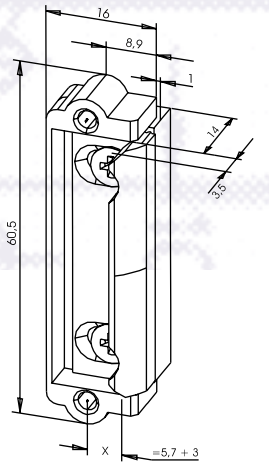

Model 1410-35------00 Adjustment range offset towards non-hinge side
with surface-mounted attachment
14.7610011---40
in preparation for model series 19,119

Dimension x: Centre fixing hole to inner edge of surface-mounted components.

For adjustment range of surface-mounted attachments and other combination possibilities, see page 230, 231 ➔➔

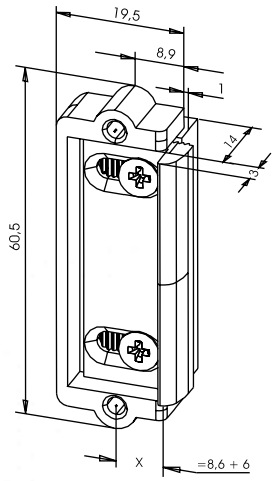

Model 1410-7-------00
Adjustment range offset towards hinge side
with surface-mounted attachment
S.642/5------40
in preparation for model series 14,17,116

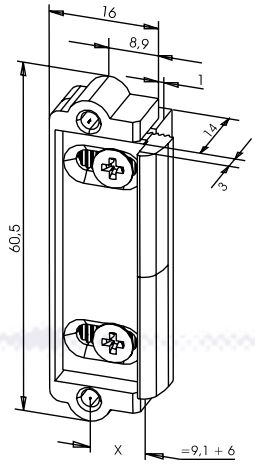

Model 1410-39------00
Adjustment range offset towards hinge side
with surface-mounted attachment
S.642/5------40
in preparation for model series 19,119

Order data DUMMY COMPONENTS with striking plate									Order number = blue area		
Model	Mechanical unlocking		Design		Striking plate		Colour			DIN orientation	
Digits 1 - 7					Digits 8 - 10		Digits 11 + 12		Digits 13 + 14	Digits 15	
									– –		
1410	E	E	RR	RR	HZ	021	EST	35		UNI	I
1410-4-					IW	277	galvanized	40		DL	4
1410-14					HFZ	033	grey	02		DR	5
1410-45	The design and dimensions of variant 1910 E correspond to model series 19, see data sheet page 48.						gold	01			
1410-14											
1410-28											
1410-35	The design and dimensions of variants E and RR correspond to model series 17 E and 17 RR, see data sheet page 45 and 47. Only combinable with order data 1410.				For other striking plates and colour tables see page 120.		Possible colours page 236.				
1410-7											
1410-39											
1910E--											

Striking plates with keep guide cannot be combined with "E". Dummy components can be combined with all available effeff striking plates with the exception of striking plates for high-security strikes 141, 131, 331. Dummy components may not be used in fire doors.

→ Transfer number to order fax sheet on page 242.

For adjustment range of surface-mounted attachments and other combination possibilities, see page 230, 231 →→

For electric strikes with FAFIX and dummy components, there is a range of additional surface-mounted attachments available. This allows wide-ranging structural adjustments to be made to frames and locks.

Pos.	Keep position	Order no.	Max. X in mm / adjustment range in mm						Special feature
			Model 14 Fafix		Model 17		Model 19		Strike model
			1410		1410E 1410RR		1410-14 1910E		Dummy component model
1	A	14.1000011---40	7,1	+3	7,6	+3	7,6	+3	Standard
2	A	14.100001103-40	7,1	+3	7,6	+3	7,6	+3	3 mm protruding keep
3	A	19.2100011---40	6,1	+4	6,6	+4	6,6	+4	Round corners for recessed profiles
4	B	14.7610011---40	5,2	+3	5,7	+3	5,7	+3	
5	C	S.642/5------40	8,6	+6	9,1	+6	9,1	+6	Extended adjustment range
6	B	14.936001----40	6,1	+3	6,6	+3	6,6	+3	Round corners for recessed profiles
7	A	17.1900011---40	7,1	+3	7,6	+3	7,6	+3	1 mm recessed keep
8	A	17.5600011---40	—	—	7,6	+3	—	—	Only for 17RR, 1410RR, 3 mm protruding keep
9	B	17.2000011---40	5,2	+3	5,7	+3	5,7	+3	1 mm recessed keep
10	B	17.200001111-40	5,2	+3	5,7	+3	5,7	+3	Keep milled at the side
11	B	17.1320011---40	2,6	+3	3,1	+3	3,1	+3	
12	A	19.4320011---40	7,1	+3	7,6	+3	7,6	+3	Central 19 mm recessing for roller keep
13	C	19.1620011---40	8,6	+4	9,1	+4	9,1	+4	
Mounted attachments for electric strikes with hold-open function (2 types)									
			Model 24 Fafix		Model 27		Model 29		
14	A	24.1000011---40	7,1	+2	7,6	+2	7,6	+2	Standard
15	A	24.100001103-40	7,1	+2	7,6	+2	7,6	+2	3 mm protruding
16	B	24.7610011---40	5,2	+3	5,7	+3	5,7	+3	Round corners for recessed profiles
17	C	27.155001103-40	8,1	+2	8,6	+2	8,6	+2	3 mm protruding
18	A	29.2100011---40	7,1	+2	7,6	+2	7,6	+2	Round corners for recessed profiles
19	A	29.4230011---40	7,1	+2	7,6	+2	7,6	+2	Central 19 mm recessing for roller keep
Mounted attachments for electric strikes with radius keep									
			Model 116		Model 126				
20	A	116.000011-----40	6,5	+2					Standard
21	B	116.1000011----40	3,5	+2					
22	B	116.3400011----40	5,0	+2					
23	C	116.1200011----40	9,5	+2					
24	A	116.4700011----40	6,5	+2					Stable messing finish
25	A	116.600011-----40	6,5	+2					For 166RR
26	A	116.1100011----40	6,5	+2					12 mm recess for roller keep
27	A	116.1300011----40	6,5	+2					16.5 mm recess for roller keep
28	A	116.1400011----40	6,5	+2					17 mm recess for roller keep
29	A	126.000011-----40			6,5	+2			For model 126

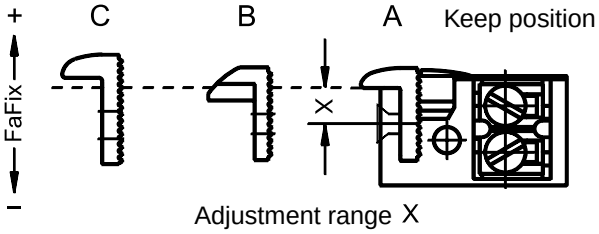

Pos. 19

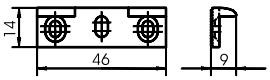

29.4320011--- 40

Surface-mounted attachments model 116, 126

Pos. 20

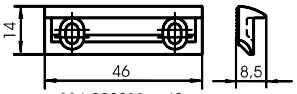

116.000011--- 40

Surface-mounted attachments model 14, 17, 19

Pos. 1

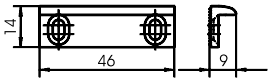

14.1000011--- 40

Pos. 2

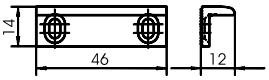

14.100001103-40

Pos. 3

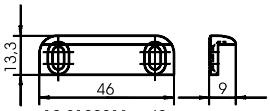

19.2100011--- 40

Pos. 4

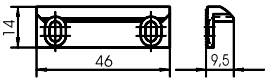

14.7610011--- 40

Pos. 5

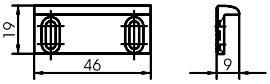

S.642/5------40

Pos. 6

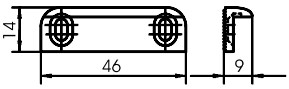

14.936001--- 40

Pos. 7

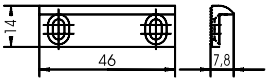

17.1900011--- 40

Pos. 8

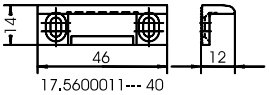

17.5600011--- 40

Pos. 9

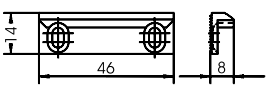

17.2000011--- 40

Pos. 10

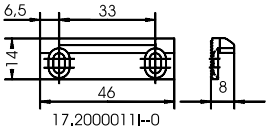

17.2000011--0

Pos. 11

17.1320011--- 40

Pos. 12

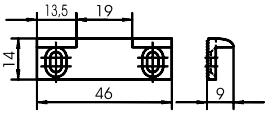

19.4320011--- 40

Pos. 13

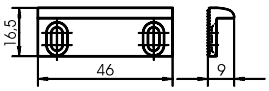

19.1620011--- 40

Surface-mounted attachments model 24, 27, 29

Pos. 14

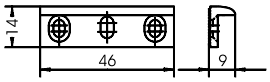

24.1000011--- 40

Pos. 15

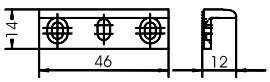

24.100001103- 40

Pos. 16

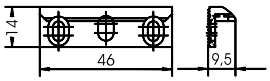

24.7610011--- 40

Pos. 17

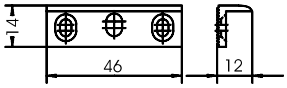

27.155001103-40

Pos. 18

29.2100011--- 40

Pos. 21

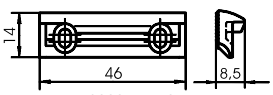

116.1000011-- 40

Pos. 22

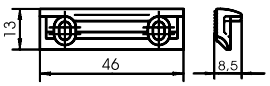

116.3400011-- 40

Pos. 23

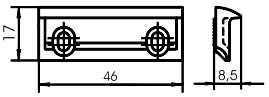

116.1200011-- 40

Pos. 24

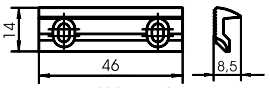

116.4700011-- 40

Pos. 25

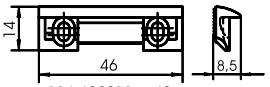

116.600011--- 40

Pos. 26

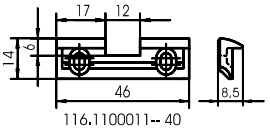

116.1100011-- 40

Pos. 27

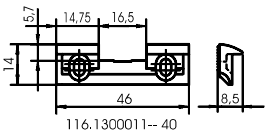

116.1300011-- 40

Pos. 28

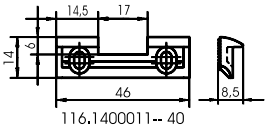

116.1400011-- 40

Pos. 29

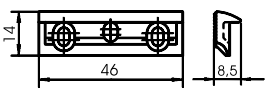

126.000011--- 40

A ..... Version A: used for precise definition instead of specifying DIN left/right

AC ..... Alternating voltage, previously called WS

AK/RR ..... Monitoring contact in the form of a floating changeover contact. Is actuated by the armature (locking mechanism)

ATP ..... Electric strike for screw-on panic door locks with horizontal actuating bar

B ..... Version B: used for precise definition instead of specifying DIN left/right

DC ..... Direct voltage, previously called GS

DL ..... DIN left

DR ..... DIN right

E ..... Mechanical unlocking: Strikes with actuating lever in the keep area for mechanical release of the keep. Configured in model series 12 as an adjusting screw.

eE ..... Permanent electrical unlocking: These strikes are continuous current-proof and are operated with direct voltage, in most cases via timers or switches.

EST ..... Stainless steel

F ..... FIX indicates adjustment facility of the strike in the striking plate

FF ..... FAFIX indicates adjustment facility of the keep

HZ ..... Long flat striking plate, former designation

HZF ..... Long flat striking plate with keep guide, former designation

iS ..... Strike housing for screw-mounting

iW ..... Long angled striking plate, former designation

K ..... Strike for rim lock

kF ..... Short flat striking plate with keep guide, former designation

KiS ..... Surface-mounted strike

kiW ..... Short angled striking plate, former designation

kl ..... Short flat striking plate, former designation

LAP ..... Long flat striking plate with extended keep guide, former designation

N ..... Newton

RR ..... Monitoring contact as floating changeover contact. Is actuated via a slide by the latch bolt

S ..... Special model 14. DIN right is the mirror inverted version of DIN left

St ..... Adjusting screw for adjustment of the keep (stop) on striking plates with keep guide

UNI ..... Strikes or striking plates which are suitable for DIN left and DIN right doors

VGL ..... Strikes for all-glass systems. Door leaf and "frame" made of glass

wd ..... Water-resistant version

Zy ..... Prepared for profile cylinder

05 ..... Continuous current-proof strikes with recovery diode for 12 V DC access control systems

06 ..... Strikes which are suitable for permanent current with protection diode for 12 V DC-access control units, monitoring function (RR) and adjustable keeper FaFix (FF).

1-Type
Fail unlocked function

(e.g.: 17E----33835011)

The door can only be opened while a contact is made. In alternating current operation, a humming noise is audible. In direct current operation, there is no noise. When mounting with a throw-open spring or throw-open bolt, the door is opened visibly after a contact is made. Rated voltage 6-12 V (8-12 V) momentary contact. Special voltages on request, version for permanent contact eE only if ordered specially.

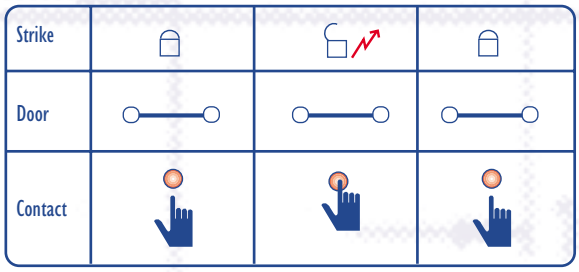

2-Type
Hold-open function

(e.g.: 27-----32440D14)

The latch bolt-controlled hold-open catch in the centre of the keep holds the strike unlocked even after a contact is made until the door is opened.

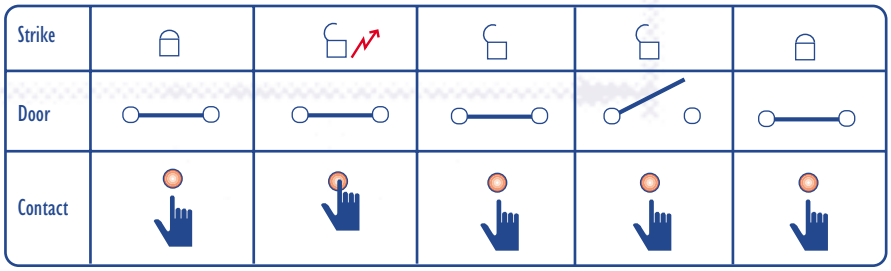

3-Type
Fail locked function

(e.g.: 34-----F02140R15)

The strike is blocked as long as the current is switched on. Once the current is switched off or interrupted due to a power failure, the keep can be moved and the door opened. Rated voltage 24 V. For use in doors forming part of escape routes, use exclusively model 331 combined with an escape route system (see brochure FT). These systems are in compliance with building regulations.

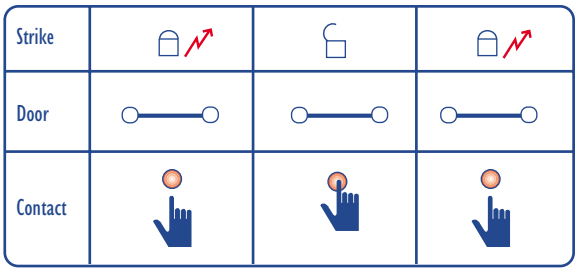

Mechanical unlocking

(Models …E) The unlocking lever in the corner of the keep aperture switches the strike function off during visiting hours. The keep can be moved and the door opened as often as required. Free passage through the door. Equipment of the door with an additional door closer prevents the door being opened unintentionally, for example due to a draft or gust of wind etc.

Electrical unlocking

(Model … eE) The door strike function (= door held closed by the rigid keep) is switched off for certain periods electrically by the application of permanent direct current (dE) via a special switch or a timer. The keep is movable when the unlocking function is switched on. The door can be opened as often as required. Equipment of the door with an additional door closer prevents the door being opened unintentionally, for example due to a draft or gust of wind etc. Momentary contact making is possible with alternating voltage.

Monitoring contact

Order suffix added to model designation (digits 1 - 7) RR.
The monitoring contact is actuated via a slide or an actuating plate which is located directly behind the engaging edge of the keep by the latch bolt latching into position. The monitoring contact is always configured as a floating changeover contact. Strikes with monitoring contact are fitted with three additional terminals which are colour coded.
green = n = base contact (common connection)
blue = no = normally open contact
red = nc = normally closed contact
Deviating abbreviations are indicated in each case in the provided installation instructions.
Conversely to other types of monitoring contact such as magnetic or taper contacts, the special position of the monitoring contact in the strike means that it indicates with absolute precision that the door is closed and the latch bolt in place. Monitoring contacts are required in the main in access control systems. The monitoring contact signals the door status "open" or "shut". The access control system evaluates this information and monitors the door. If, for example, a door is not closed after being passed through, the access control system initiates an alarm. The application of current to the strike is terminated when the door is opened, so that when the door is closed it is immediately locked again. Signals to alarm systems, building management systems etc. are also implemented by means of monitoring contacts. Monitoring contacts are ideally suited for the creation of interlock systems using strikes. The condition for optimum function is correct positioning of the latch bolt in the keep. In order to guarantee the necessary actuating path of the slide or the actuating plate, the latch bolt must penetrate completely into the keep.
Switching output 24 V / 1 A ohmic load)

Armature contact

Order suffix 1.-7. digit 'AKRR'. Is being controlled by the blocking mechanism inside the strike. Monitors internal locking position of strike. Technical data see RR versions.

Explanation on the "Electrical data" tables

Operating voltage tolerance range:

Within the specified tolerance range, the strike operates with absolute functional reliability and complies with the given specifications. When planning, always take into account that the operating voltage must be applied to the strike terminals. A voltage loss (voltage drop) takes place between the transformer and the strike during strike operation, which in the case of long conductors with a low cross-section, can result in a drop below the specified operating voltage despite the fact that the rated voltage of the transformer is in agreement with the stated operating voltage range of the strike. A drop below operating voltage also occurs in the case of transformers or power supply units with a specified rated current below the current consumption of the selected electric strike. If a drop below operating voltage occurs, operation is no longer possible. When dimensioning conductor cross-sections, transformers, power supply units and also when selecting a suitable strike, our technical support service will be pleased to assist you.

Operating voltage 6-12 V 8-12 V (D1) 8-16 V (R1) 12 V intercom (E5) 12 V AC/DC (E1) 24 V AC/DC (F1)

These models are designed for brief operation (max. 5 secs) but are not suitable to be permanently connected to electrical current. In brief operation, the operating voltage may not be exceeded by more than 50%.

Operating voltage 12 V eE (E3) 24 V eE (F3)

These models are designed for permanent operation with direct voltage. They permit a door to be permanently unlocked over long periods. Operation with alternating voltage, which will result in a humming noise, is also possible. In brief operation, the operating voltage may not be exceeded by more than 50%.

Operating voltage 12 V 100% duty cycle (E4) 24 V 100% duty cycle (F4)

These models are designed for permanent operation with direct voltage. They permit a door to be permanently unlocked over long periods. Operation with alternating voltage is not possible. In brief operation, the operating voltage may not be exceeded by more than 50%.

xx05 models for 12 V DC access control units

The suffix '05' within the order number (1. - 7. digit) describes a protection diode which is parallel switched to the solenoid, protecting the electronics from overload. These models can only be operated with DC and can be used in conjunction with E3 and E4 currencies.

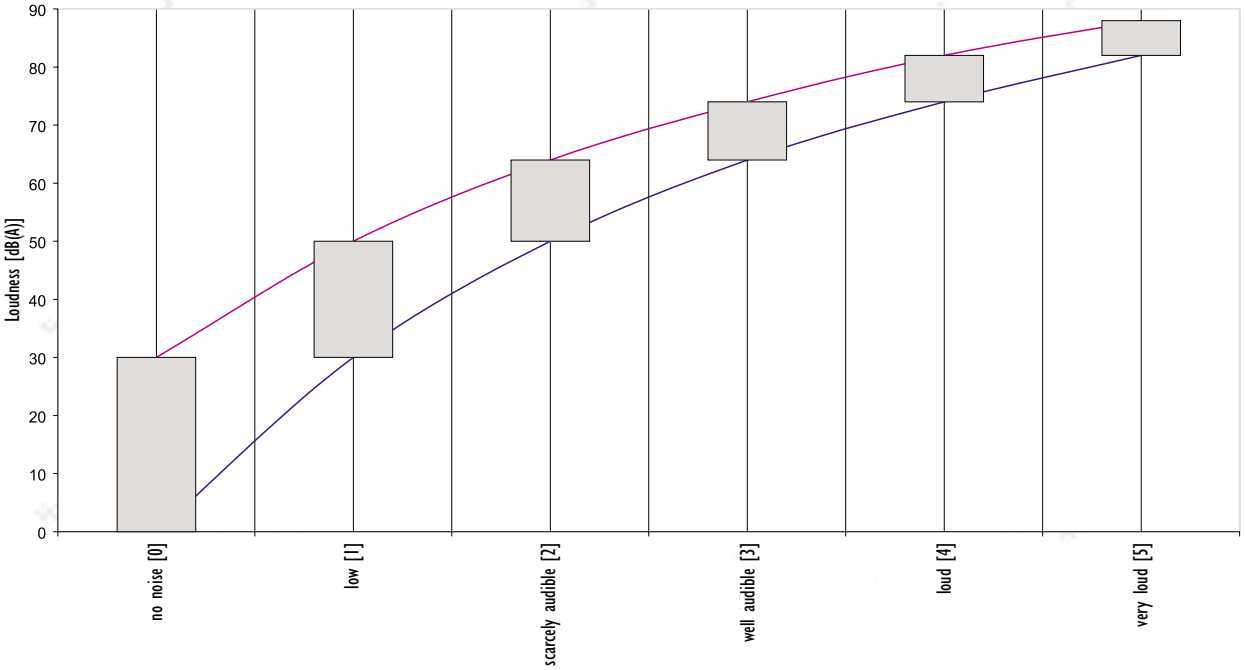

Pre-load / keep pre-load indication in Newton (N)

Due to door seals, door geometries, unfavourable mounting conditions and differences in air pressure existing on the inside and outside of the door leaf, the latch bolt exerts a force on the keep. Th electrical unlocking property of the strike is guaranteed up to the specified value. The specified values have been determined under laboratory conditions and are used for comparison of the strike models and as an aid to selection of the most suitable model. Depending on the door geometry and the lock used, the values determined at the door leaf can vary when the strike is mounted. Specifically where large forces (pre-load) are involved, the model series 131 and 331 offer reliable function.

Explanation on the "Specifications" tables

Break-in resistance:

This specification indicated here defines the stability of the strike. This value also plays a determining role in selecting the most suitable electric strike where heavy-duty doors and doors with a high frequency of through traffic are involved.

Operating noise (see table):

The specified values were determined under laboratory conditions and are used to compare the different strike models. These values can vary depending on materials and on the mounting situation.

Operating temperature range:

The strike is guaranteed to function within this range. However, please note that other ambient conditions such as the condensation in case of marked fluctuations in temperature and high humidity as well as freezing of the strike can exert an impeding effect on function of the strike. When mounting in this type of environment, we recommend using model series 12 wd with heating.

Mounting independent of position:

Strikes can be mounted vertically, horizontally or turned by 180°. With horizontal mounting, the strike must be mounted on the lock side in order to avoid unfavourable levering effects. Mounting in the floor area is not admissible. Strikes for fire doors may only be used in the correct position as illustrated in order to guarantee reliable holding even in case of fire.

Surface finish of striking plates

In the striking plate tables, the possible surface finishes are listed with the relevant assigned 2-digit EDP number. In the price list matrix, the surface finishes are assigned to the striking plates. The following surface finishes are available in our standard delivery range:

35 – Stainless steel. Characterized by a fine-ground finish. Stainless steel striking plates are recommended due to their corrosion resistance and solid surface. Regrinding is easily possible, as no coatings are applied.

40 – Galvanized and ground. Here too, the surface finish is fine, and corrosion protection is guaranteed by the galvanization treatment.

31 – Polished brass. The shiny surface is additionally protected by a clear varnish.

41 – Yellow chromatized. Chromatization guarantees corrosion protection.

The following powder-coated surfaces are produced using the latest technology and powder coating equipment to the accustomed high standard of effeff quality.
01 – Gold-coloured / ducat gold
02 – Grey / dust grey RAL 7037
05 – Black / graphite black RAL 9011
04 – White / traffic white RAL 9016
03 – Copper metallic
In deviation to the dimensional drawings, with powder-coated striking plates the dimensions differ by the powder coating thickness of 0.2 mm.

Striking plates produced in surface finishes 01-02-05-03-04 are available in a range of additional special colours. For set-up costs and surcharge, please see the current price list:
73 – Mahogany RAL 8016
07 – Chocolate RAL 8017
26 – Black / red RAL 3007
17 – Gentian blue RAL 5010

These striking plates can naturally also be produced in all the most common RAL colours. For set-up costs, delivery times and surcharges, please enquire.

DIN table

Rule of thumb:
The door is seen from the side on which the hinges are visible, i.e. this is the side to which it is opened.

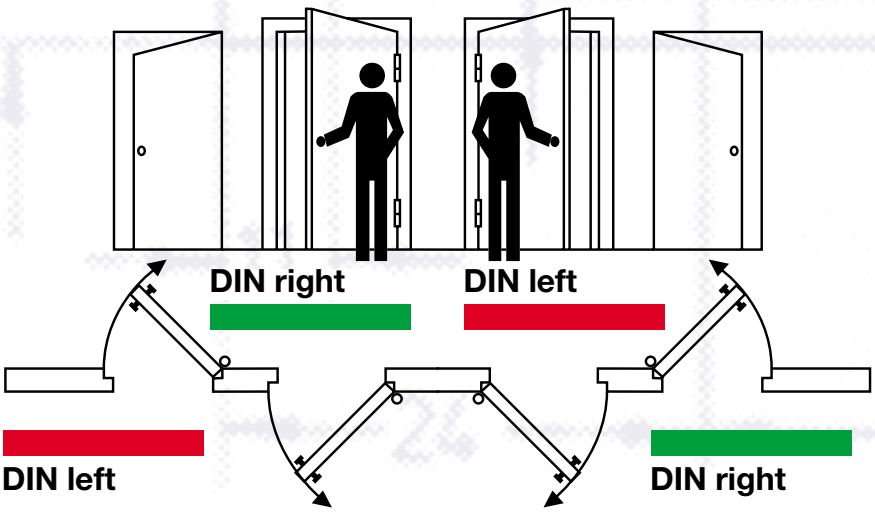

Fix

Adjustable and fixable strikes

The ideal way to simplify mounting the strike: The screw holes in the striking plate are milled to an oval. The strike housing can be moved horizontally within this range after mounting by up to 4 mm, aligned to the latch bolt and fixed using the provided fixing grooves. Correction and reliable installation even where mounting conditions are at their most difficult.

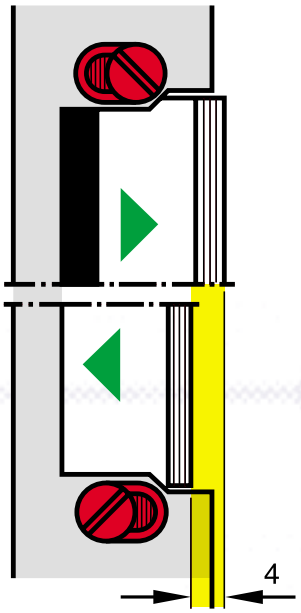

Fafix

Strikes with adjustable and fixable keep:

The ideal way to simplify keep adjustment:
Simple installation, uncomplicated adjustment of the keep to the latch bolt after mounting. Compensation for expansion is possible using this method by readjusting the strike at any time. The adjustment facility also allows subsequent adjustment to the latch bolt even where space is at a premium.

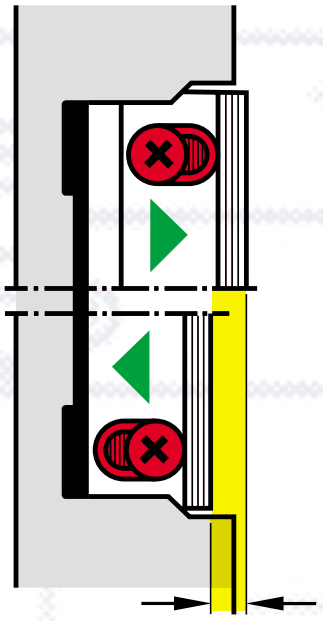

Adjustment range
see surface-mounted attachments page 230.

It is our intention to continue to keep abreast of calls for further technical developments and innovations. For this reason, we reserve the right to make design changes. Despite meticulous care taken in publication, printing or other errors cannot be excluded. effeff is unable to accept any liability and enters into no obligation whatsoever.

Strikes

Model number	Page
A01/A02/A03	224
1060	66
12/130	64
12EFKAB	58
12FKAB	58
12IS	60
12K	62
12wd	56
14	36/14/22/26
14A	40
14ATP	118
14RR	38
14S	42
1405RR	14/22/26
1410	228
17	44/12/16/20
17RR	46
1705RR	12/16/20
19	48/24
1905	24
22EFKAB	58
22FKAB	58
22IS	60
22wd	56
24	36
24A	40
24RR	38
24S	42
27	44
29	48
32FKAB	58
32IS	60
32wd	56
34	36
34A	40
34ATP	118
34RR	38
34S	42
37	44
37RR	46
102	108
116	50/30
116RR	52
11605RR	30
119	54
126	50
129	54
131	80
131FF	72
136	50
136RR	52
141	82
141FF	74
142	76
142FF	70
142RR	78

220 102
222 100

310 102
312 100
331 84

342 76
342RR 78

351 104

914 88
914RR 88

934 88
934RR 88

1801 116
3801 116

9014 ..... 94/96
9014RR 94/96

9034 ..... 94/96
9034RR 94/96

9102 110
9314 114
9334 112

90141 98
90146 98

90341 98
90346 98

142.380 106

110/1110 102
112/1112 100

914Zy 90

9314RR 114
9334VGL 92

Striking plates

Model number	Type	Page
002	Flat striking plate	150
003	Flat striking plate	214
010	Flat striking plate	150
011	Flat striking plate	150
013	Flat striking plate	170
015	Flat striking plate	150
021	Flat striking plate	150
024	Flat striking plate	214
028	Flat striking plate	214
030	Flat striking plate	222
031	Flat striking plate	222
033	Flat striking plate	194
034	Flat striking plate	194
038	Flat striking plate	150
039	Flat striking plate	206
042	Flat striking plate	130
047	Flat striking plate	130
049	Flat striking plate	154
050	Flat striking plate	174
051	Flat striking plate	174
052	Flat striking plate	174
053	Flat striking plate	170
054	Flat striking plate	178
062	Angled striking plate	122
063	Angled striking plate	122
066	Angled striking plate	122
067	Angled striking plate	122
068	Angled striking plate	138
069	Angled striking plate	126
071	Angled striking plate	218
077	Angled striking plate	122
080	Angled striking plate	122
090	Angled striking plate	218
095	Flat striking plate	222
096	Short striking plate	182
097	Short angled striking plate	146
098	Short striking plate	182
099	Short striking plate	190
103	Short striking plate	182
106	Short striking plate	182
107	Short striking plate	186
116	Flat striking plate	214
120	Short striking plate	182
121	Short striking plate	182
123	Short striking plate	182
126	Short striking plate	182
128	Short striking plate	182
137	Short angled striking plate	146
142	Flat striking plate	206
150	Short striking plate	190
151	Short striking plate	190
152	Short striking plate	190
153	Short striking plate	190
154	Short striking plate	190
155	Short striking plate	190
157	Short striking plate	190
160	Angled striking plate	138
165	Flat striking plate	198
166	Flat striking plate	198
168	Flat striking plate	198
169	Short striking plate	210
171	Flat striking plate	166
173	Short striking plate	182
174	Flat striking plate	170
178	Short striking plate	190
179	Angled striking plate	134
181	Flat striking plate	174
184	Short striking plate	190
185	Short striking plate	182
186	Flat striking plate	178
262	Short striking plate	202
264	Flat striking plate	150

271 ..... Short striking plate 202
272 ..... Angled striking plate 122
277 ..... Angled striking plate 126
278 ..... Angled striking plate 126
282 ..... Flat striking plate 194
283 ..... Flat striking plate 150
286 ..... Short striking plate 202
287 ..... Flat striking plate 178
293 ..... Short striking plate 182
296 ..... Flat striking plate 150
310 ..... Flat striking plate 206
311 ..... Flat striking plate 154
312 ..... Angled striking plate 134
314 ..... Flat striking plate 198
318 ..... Flat striking plate 178
320 ..... Flat striking plate 154
324 ..... Angled striking plate 122
328 ..... Angled striking plate 142
331 ..... Flat striking plate 154
333 ..... Flat striking plate 174
334 ..... Angled striking plate 142
338 ..... Flat striking plate 154
343 ..... Flat striking plate 166
350 ..... Flat striking plate 162
354 ..... Flat striking plate 158
355 ..... Flat striking plate 178
356 ..... Flat striking plate 166
358 ..... Flat striking plate 162
359 ..... Flat striking plate 154
360 ..... Flat striking plate 154
370 ..... Flat striking plate 178
381 ..... Flat striking plate 154
385 ..... Flat striking plate 154
389 ..... Short angled striking plate 146
391 ..... Flat striking plate 158
394 ..... Flat striking plate 162
403 ..... Short striking plate 182
405 ..... Flat striking plate 206
415 ..... Angled striking plate 142
420 ..... Angled striking plate 142
421 ..... Angled striking plate 122
422 ..... Angled striking plate 138
425 ..... Flat striking plate 206
426 ..... Flat striking plate 162
434 ..... Flat striking plate 166
436 ..... Short striking plate 186
443 ..... Flat striking plate 166
444 ..... Flat striking plate 166
445 ..... Flat striking plate 166
450 ..... Angled striking plate 126
451 ..... Angled striking plate 218
452 ..... Flat striking plate 154
457 ..... Short striking plate 186
460 ..... Angled striking plate 142
467 ..... Flat striking plate 166
472 ..... Flat striking plate 206
760 ..... Angled striking plate 134
769 ..... Flat striking plate 162
814 ..... Flat striking plate 150
826 ..... Angled striking plate 134
842 ..... Angled striking plate 122
851 ..... Flat striking plate 194
855 ..... Flat striking plate 162
858 ..... Angled striking plate 126
909 ..... Flat striking plate 178
910 ..... Short striking plate 190
912 ..... Flat striking plate 206
920 ..... Short striking plate 186
923 ..... Angled striking plate 122
928 ..... Flat striking plate 178
972 ..... Flat striking plate 215
973 ..... Angled striking plate 219

Company ..... Sector ..... e-mail .....

Contact ..... Tel. ..... Fax .....

Street/PO box ..... Customer number .....

Post code/City ..... Order date .....

Order no.	Qty.
I I I I	
I I I I	
I I I I	
I I I I	
I I I I	
I I I I	
I I I I	
I I I I	
I I I I	
I I I I	
I I I I	

Further orders	Qty.

Company ..... Sector ..... e-mail .....

Contact ..... Tel. ..... Fax .....

Street/PO box ..... Customer number .....

Post code/City ..... Order date .....

Order no.	Qty.
I I I I	
I I I I	
I I I I	
I I I I	
I I I I	
I I I I	
I I I I	
I I I I	
I I I I	
I I I I	
I I I I	

Further orders	Qty.

Gâches électriques

Apriporta elettrici

Elektro-Türöffner

Electric strikes

Cerraderos eléctricos

effeff Fritz Fuss GmbH & Co.
Kommanditgesellschaft auf Aktien
Bildstockstraße 20
72458 Albstadt
GERMANY
Tel. +49 7431 123-700
Fax +49 7431 123-258
info@effeff.com
www.effeff.com

2.1901-0020G000

An ASSA ABLOY Group company